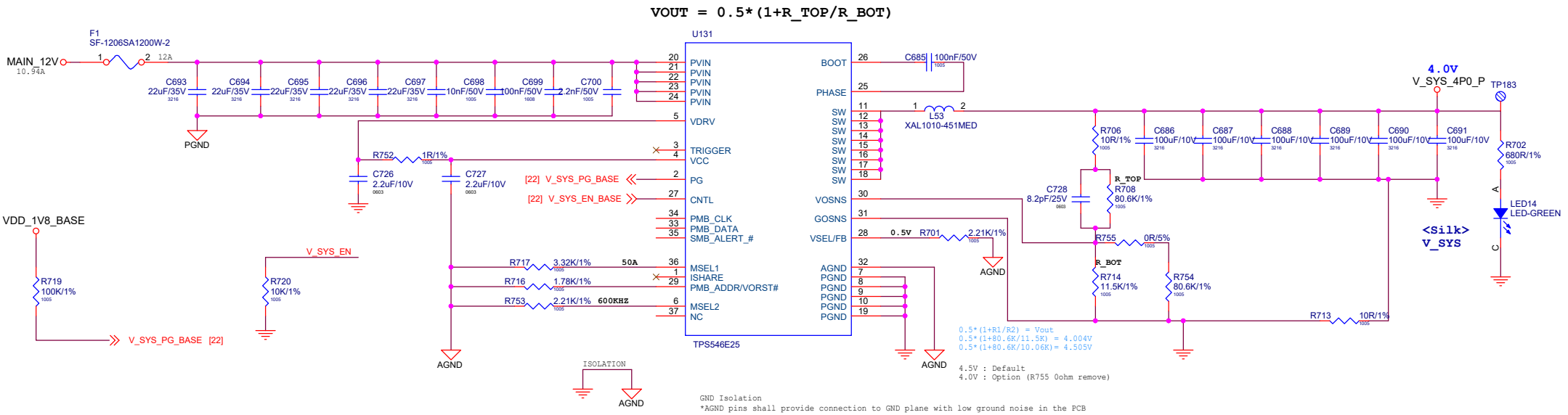


| | | |
|---|---|---|
| Title | <Title> | |
| Size A3 | Document Number <Doc> | Rev <RevCod |
| Date: Wednesday, September 03, 2025 | Sheet 1 of 1 | |

2025/09/03-10:27:18 7085C2C12153