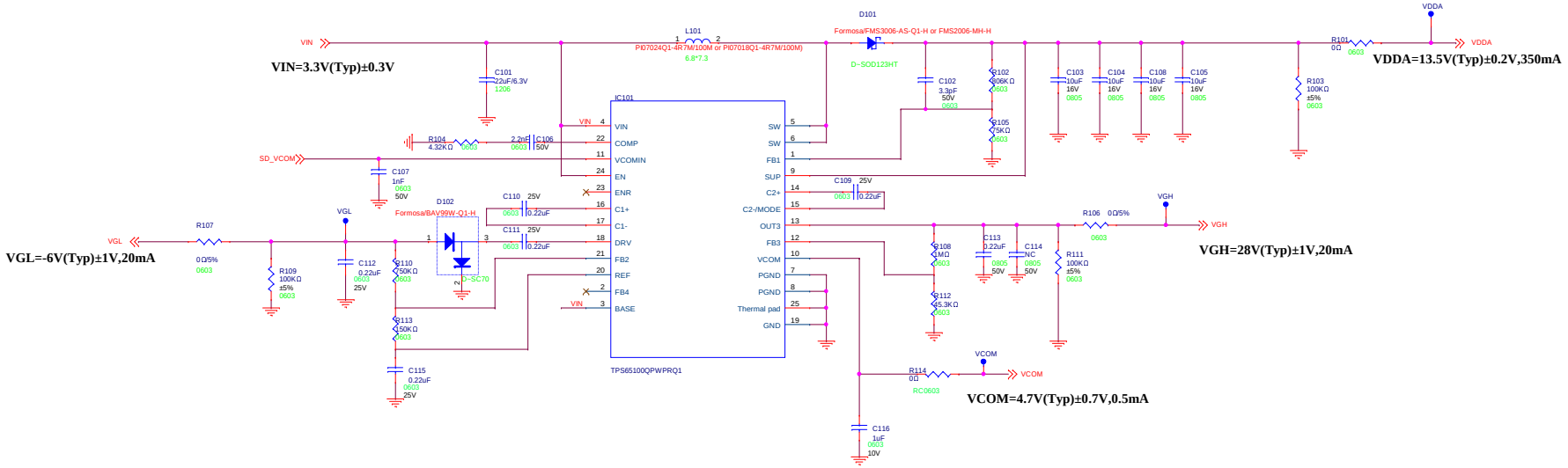

ECN	ECN NO.	DATE	NOTE	DESIGNER	DRAWING	DESIGNED	CHECKED	APPROVED	REF. NO.		MODEL NO.	
					CHUNGHWA PICTURE TUBES CO. LTD				SCALE		DRAWING	SHEET: