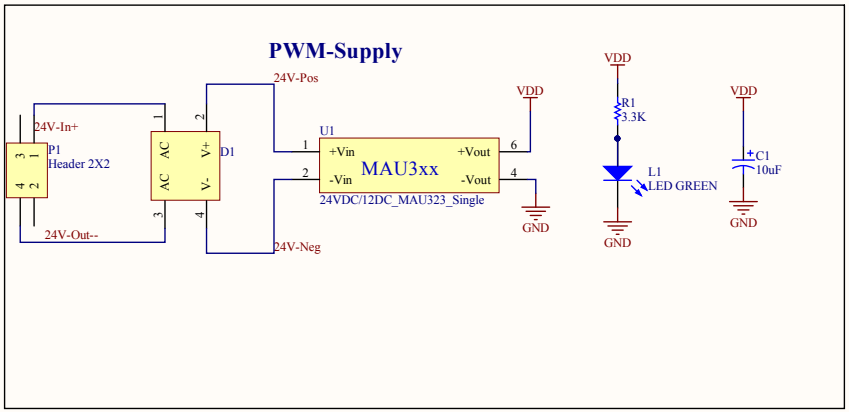

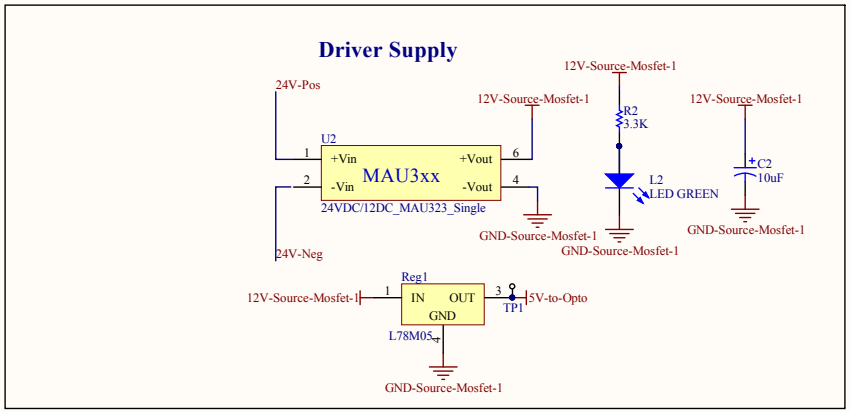

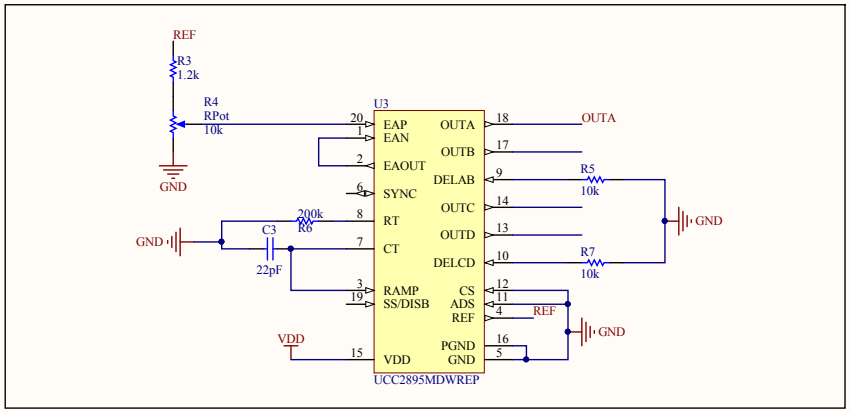

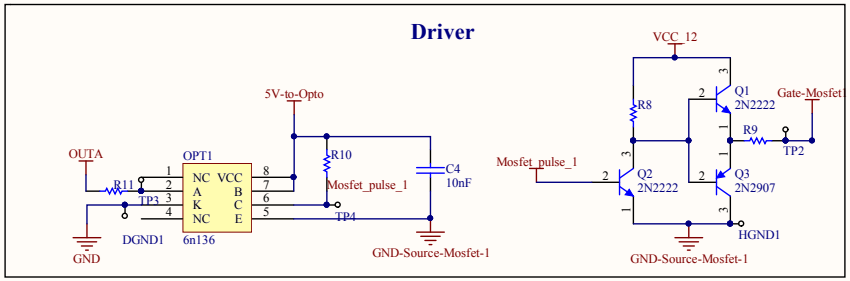

Title		
Size B	Number	Revision
Date: 9/25/2017	Sheet of	
File: D:\PCB\..\UCC2895-Voltage mode.SchDoc	Drawn By:	