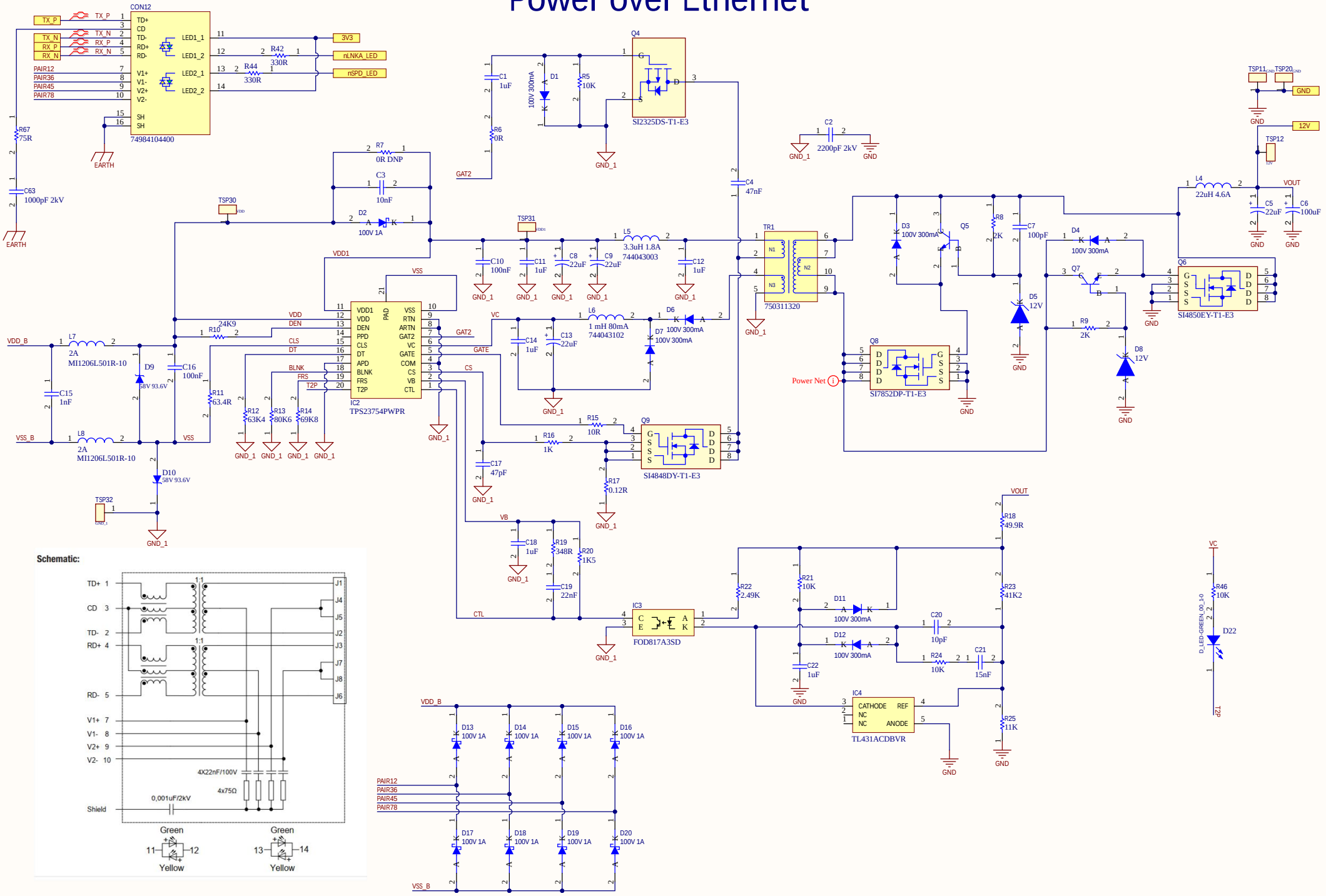Power over Ethernet