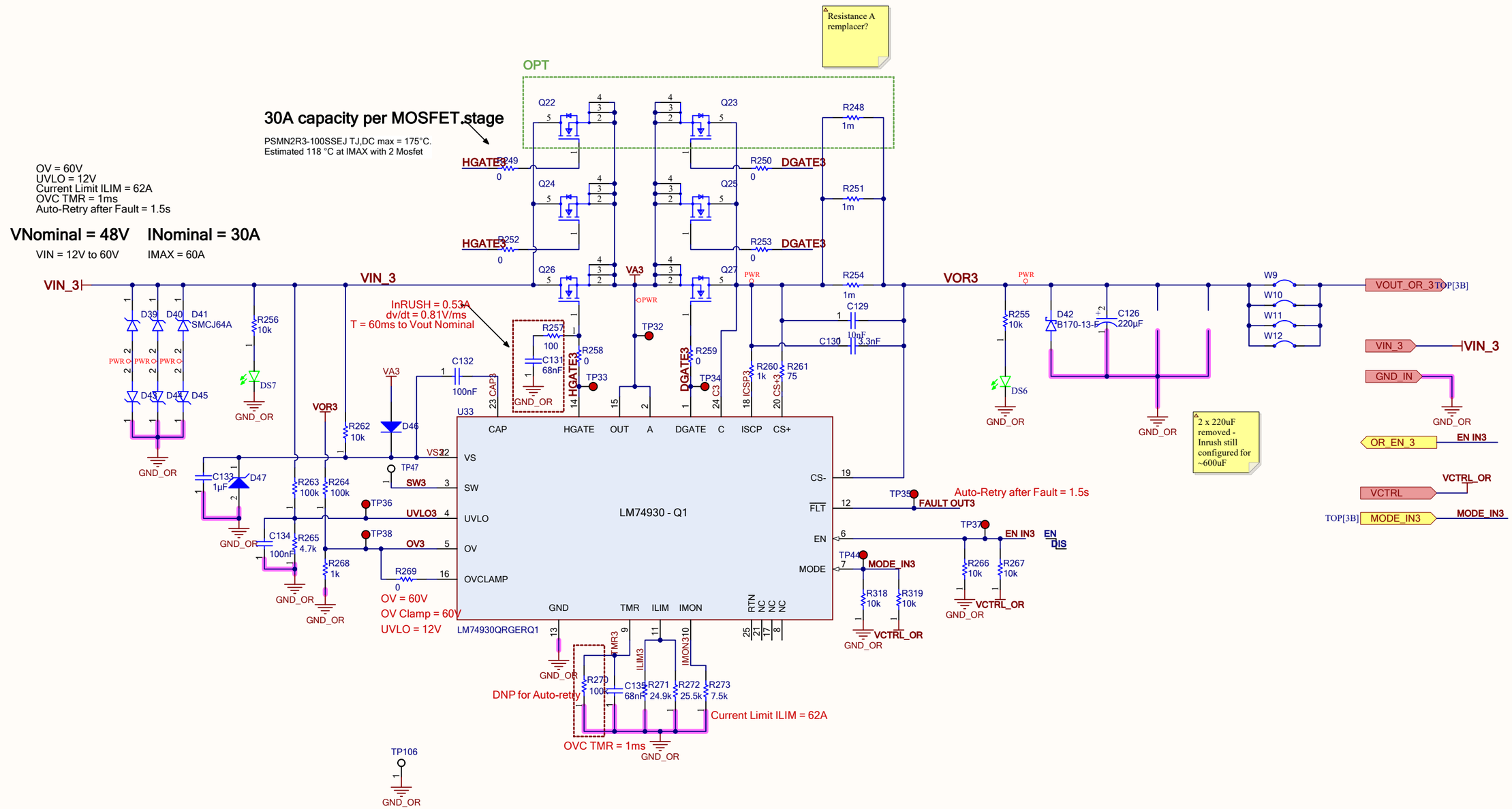
Resistance A remplacer?
OPT
30A capacity per MOSFET stage
PSMN2R3-100SSEJ TJ,DC max = 175°C.
Estimated 118 °C at IMAX with 2 Mosfet
OV = 60V
UVLO = 12V
Current Limit ILIM = 62A
OVC TMR = 1ms
Auto-Retry after Fault = 1.5s
VNominal = 48V
INominal = 30A
VIN = 12V to 60V
IMAX = 60A
VIN_3
VOR3
VA3
InRUSH = 0.53A
dv/dt = 0.81V/ms
T = 60ms to Vout Nominal
HGATE3
DGATE3
Q22
Q23
Q24
Q25
Q26
Q27
R248 1m
R249 0
R250 0
R251 1m
R252 0
R253 0
R254 1m
R257 100
C131 68nF
R258 0
R259 0
R260 1k
R261 75
C129 10nF
C130 3.3nF
R255 10k
D42 B170-13-F
C126 220µF
W9
W10
W11
W12
VOUT_OR_3
TOP[3B]
VIN_3
GND_IN
OR_EN_3
EN IN3
VCTRL_OR
VCTRL
MODE_IN3
2 x 220uF removed - Inrush still configured for ~600uF
D39
D40
D41 SMCJ64A
D43
D44
D45
R256 10k
DS7
DS6
GND_OR
C132 100nF
D46
R262 10k
C133 1µF
D47
R263 100k
R264 100k
C134 100nF
R265 4.7k
R268 1k
R269 0
TP32
TP33
TP34
TP35
TP36
TP37
TP38
TP44
TP47
TP106
U33
LM74930 - Q1
LM74930QRGERQ1
CAP
HGATE
OUT
A
DGATE
C
ISCP
CS+
VS
SW
UVLO
OV
OVCLAMP
CS-
FLT
EN
MODE
GND
TMR
ILIM
IMON
RTN
NC
SW3
UVLO3
OV3
FAULT OUT3
EN IN3
EN
DIS
MODE_IN3
R266 10k
R267 10k
R318 10k
R319 10k
R270 100
C135 68nF
R271 24.9k
R272 25.5k
R273 7.5k
DNP for Auto-retry
Current Limit ILIM = 62A
OVC TMR = 1ms
OV = 60V
OV Clamp = 60V
UVLO = 12V