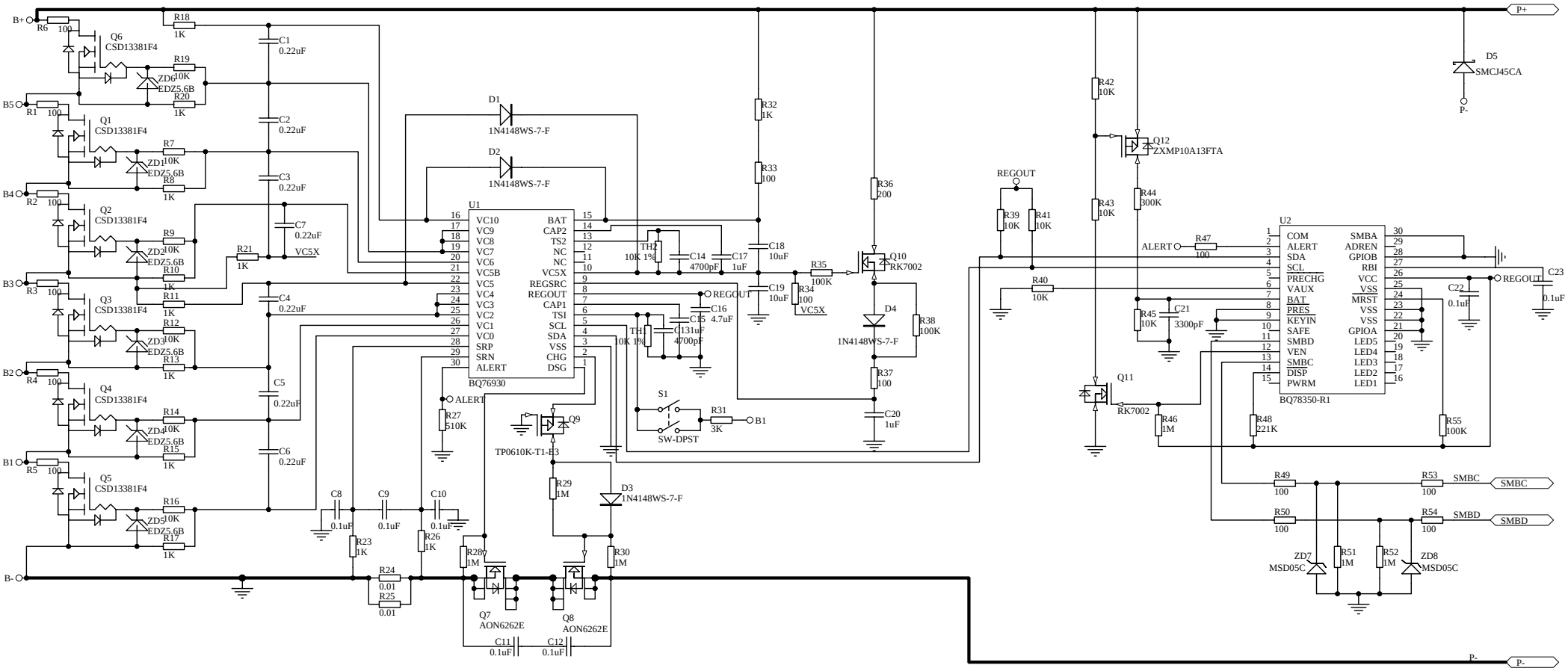
B+
B5
B4
B3
B2
B1
B-
P+
P-
R6 100
R1 100
R2 100
R3 100
R4 100
R5 100
Q6 CSD13381F4
Q1 CSD13381F4
Q2 CSD13381F4
Q3 CSD13381F4
Q4 CSD13381F4
Q5 CSD13381F4
R18 1K
R19 10K
R20 1K
R7 10K
R8 1K
R9 10K
R10 1K
R11 1K
R12 10K
R13 1K
R14 10K
R15 1K
R16 10K
R17 1K
ZD6 EDZ5.6B
ZD1 EDZ5.6B
ZD2 EDZ5.6B
ZD3 EDZ5.6B
ZD4 EDZ5.6B
ZD5 EDZ5.6B
C1 0.22uF
C2 0.22uF
C3 0.22uF
C4 0.22uF
C5 0.22uF
C6 0.22uF
C7 0.22uF
R21 1K
VC5X
U1
BQ76930
VC10
VC9
VC8
VC7
VC6
VC5B
VC5
VC4
VC3
VC2
VC1
VC0
SRP
SRN
ALERT
BAT
CAP2
TS2
NC
NC
VC5X
REGSRC
REGOUT
CAP1
TSI
SCL
SDA
VSS
CHG
DSG
D1 1N4148WS-7-F
D2 1N4148WS-7-F
TH2 10K 1%
C14 4700pF
C17 1uF
C18 10uF
C19 10uF
R32 1K
R33 100
R34 100
R35 100K
R36 200
Q10 RK7002
D4 1N4148WS-7-F
R38 100K
R37 100
C20 1uF
REGOUT
C16 4.7uF
C15 0.1uF
TH1 10K 1%
4700pF
ALERT
R27 510K
Q9 TP0610K-T1-E3
S1 SW-DPST
R31 3K
B1
R29 1M
D3 1N4148WS-7-F
C8 0.1uF
C9 0.1uF
C10 0.1uF
R23 1K
R26 1K
R28 1M
R30 1M
R24 0.01
R25 0.01
Q7 AON6262E
Q8 AON6262E
C11 0.1uF
C12 0.1uF
R42 10K
R43 10K
Q12 ZXMP10A13FTA
R44 300K
R39 10K
R41 10K
R40 10K
R45 10K
C21 3300pF
Q11 RK7002
R46 1M
R47 100
U2
BQ78350-R1
COM
ALERT
SDA
SCL
PRECHG
VAUX
BAT
PRES
KEYIN
SAFE
SMBD
VEN
SMBC
DISP
PWRM
SMBA
ADREN
GPIOB
RBI
VCC
VSS
MRST
VSS
VSS
GPIOA
LED5
LED4
LED3
LED2
LED1
R48 221K
R55 100K
C22 0.1uF
C23 0.1uF
D5 SMCJ45CA
R49 100
R50 100
R53 100
R54 100
SMBC
SMBD
ZD7 MSD05C
ZD8 MSD05C
R51 1M
R52 1M