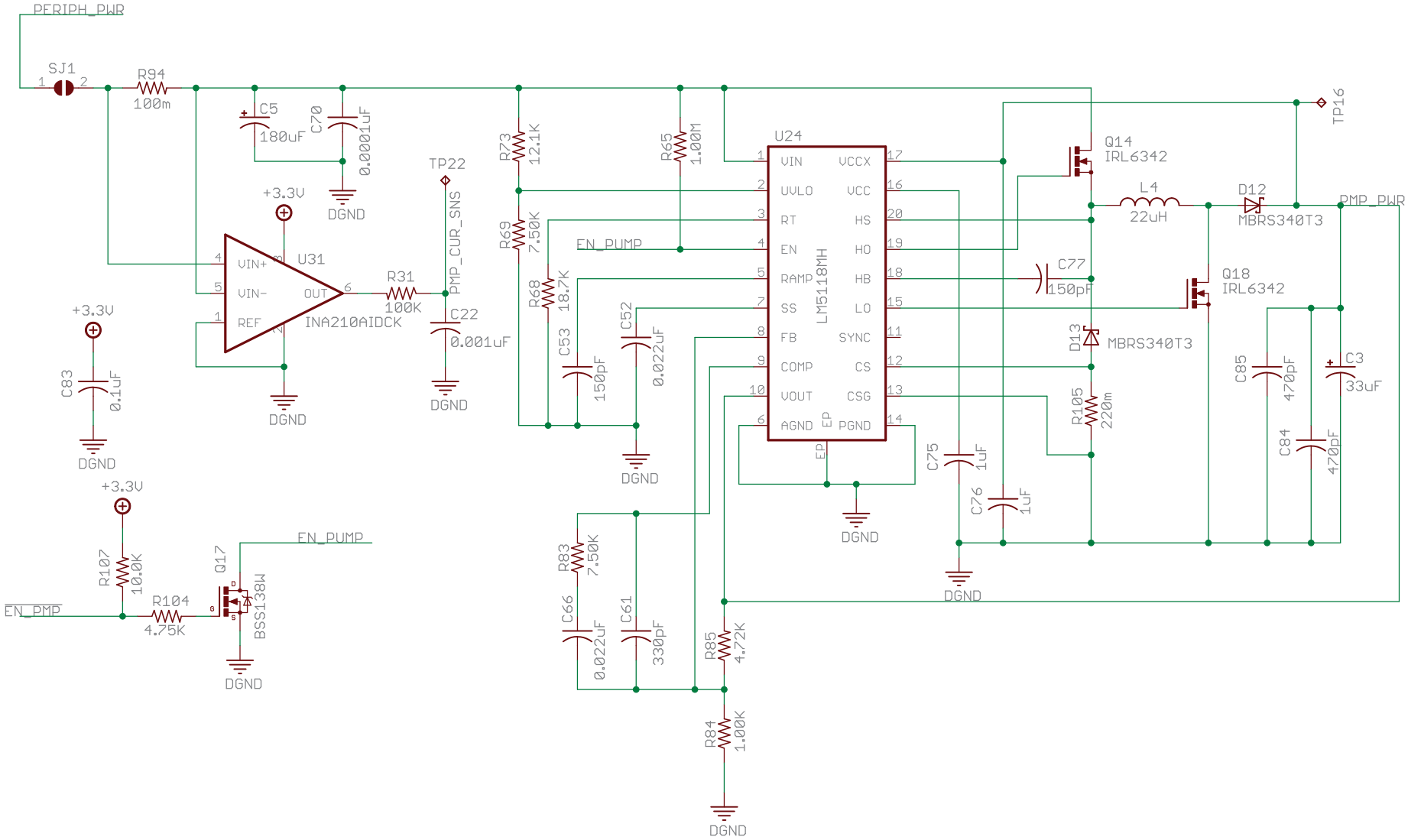

TITLE: CWLM-Controller	
Date: 10/1/2021 9:20 AM	Sheet: 7/8