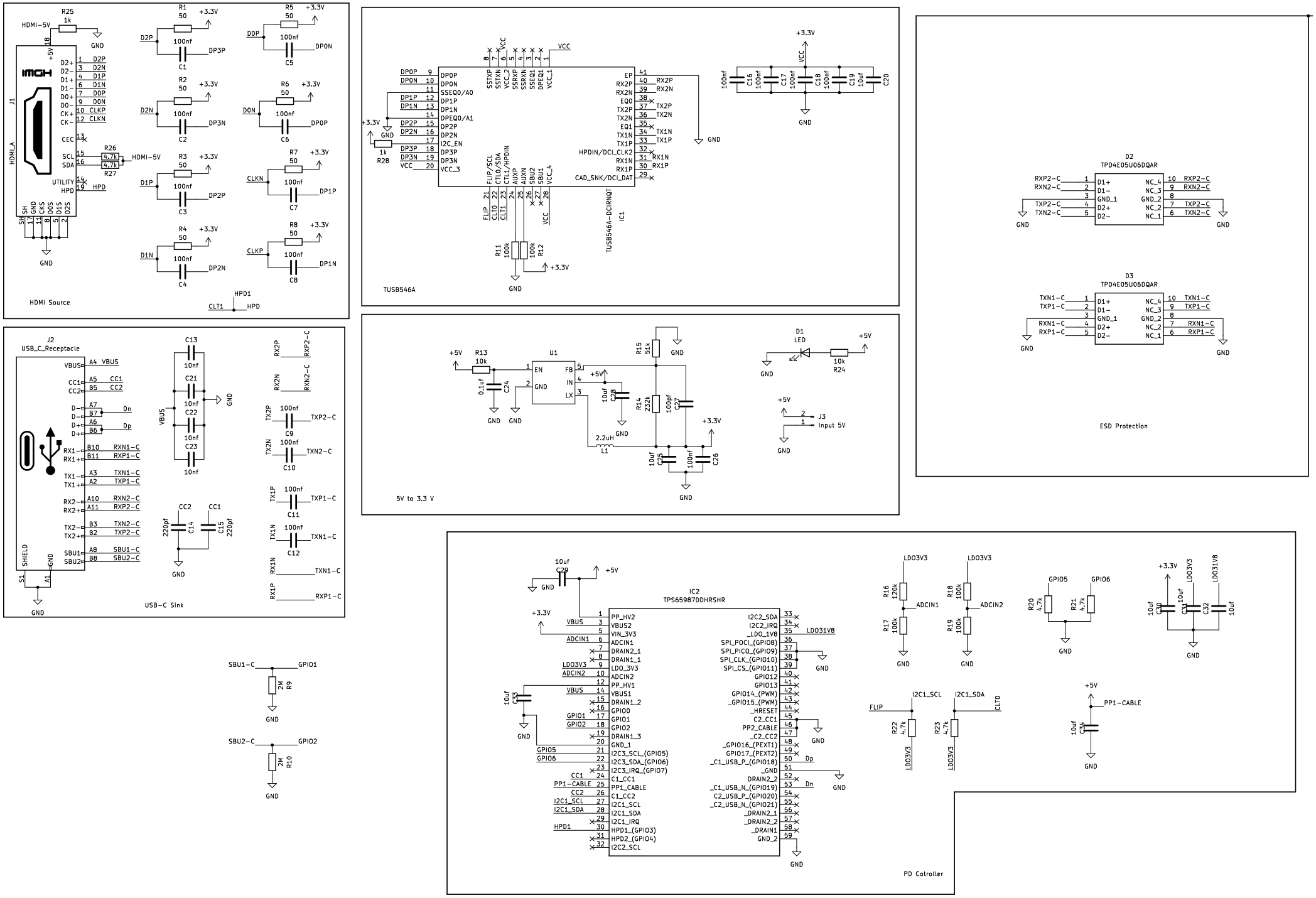
HDMI Source
J1
HDMI_A
HDMI-5V
R25 1k
R1 50
R2 50
R3 50
R4 50
R5 50
R6 50
R7 50
R8 50
R26 4.7k
R27 4.7k
100nf
C1 C2 C3 C4 C5 C6 C7 C8
DP3P DP3N DP2P DP2N DP1P DP1N DP0P DP0N
D2P D2N D1P D1N D0P D0N CLKP CLKN
CEC SCL SDA UTILITY HPD
HPD1 CLT1
+3.3V
GND
TUSB546
IC1
TUSB546A-DCIRNQT
R28 1k
R11 100k
R12 100k
C16 100nf
C17 100nf
C18 100nf
C19 10uf
C20
VCC
D2
TPD4E05U06DQAR
D3
TPD4E05U06DQAR
RXP2-C RXN2-C TXP2-C TXN2-C
TXN1-C TXP1-C RXN1-C RXP1-C
ESD Protection
J2
USB_C_Receptacle
VBUS CC1 CC2 D- D+ RX1- RX1+ TX1- TX1+ RX2- RX2+ TX2- TX2+ SBU1 SBU2
SHIELD GND
C13 10nf
C21 10nf
C22 10nf
C23 10nf
C14 220pf
C15 220pf
C9 100nf
C10 100nf
C11 100nf
C12 100nf
USB-C Sink
U1
EN GND FB IN LX
R13 10k
C24 0.1uf
R15 51k
R14 232k
C28 10uf
C27 100pf
C25 10uf
C26 100nf
L1 2.2uH
D1 LED
R24 10k
J3 Input 5V
5V to 3.3 V
IC2
TPS65987DDHRSHR
PP_HV2 VBUS2 VIN_3V3 ADCIN1 DRAIN2_1 DRAIN1_1 LDO_3V3 ADCIN2 PP_HV1 VBUS1 DRAIN1_2 GPIO0 GPIO1 GPIO2 DRAIN1_3 GND_1 I2C3_SCL_(GPIO5) I2C3_SDA_(GPIO6) I2C3_IRQ_(GPIO7) C1_CC1 PP1_CABLE C1_CC2 I2C1_SCL I2C1_SDA I2C1_IRQ HPD1_(GPIO3) HPD2_(GPIO4) I2C2_SCL
I2C2_SDA I2C2_IRQ _LDO_1V8 SPI_POCI_(GPIO8) SPI_PICO_(GPIO9) SPI_CLK_(GPIO10) SPI_CS_(GPIO11) GPIO12 GPIO13 GPIO14_(PWM) _GPIO15_(PWM) _HRESET C2_CC1 PP2_CABLE _C2_CC2 _GPIO16_(PEXT1) GPIO17_(PEXT2) _C1_USB_P_(GPIO18) _GND DRAIN2_2 _C1_USB_N_(GPIO19) C2_USB_P_(GPIO20) _C2_USB_N_(GPIO21) _DRAIN2_1 _DRAIN2_2 _DRAIN1 GND_2
LDO31V8
C29 10uf
C33 10uf
R16 120k
R17 100k
R18 100k
R19 100k
R20 4.7k
R21 4.7k
R22 4.7k
R23 4.7k
C30 10uf
C31 10uf
C32 10uf
C34 10uf
PP1-CABLE
FLIP
CLT0
PD Cotroller
SBU1-C GPIO1 R9 2M
SBU2-C GPIO2 R10 2M