POE Circuit *IEEE 802.3bt Type3*
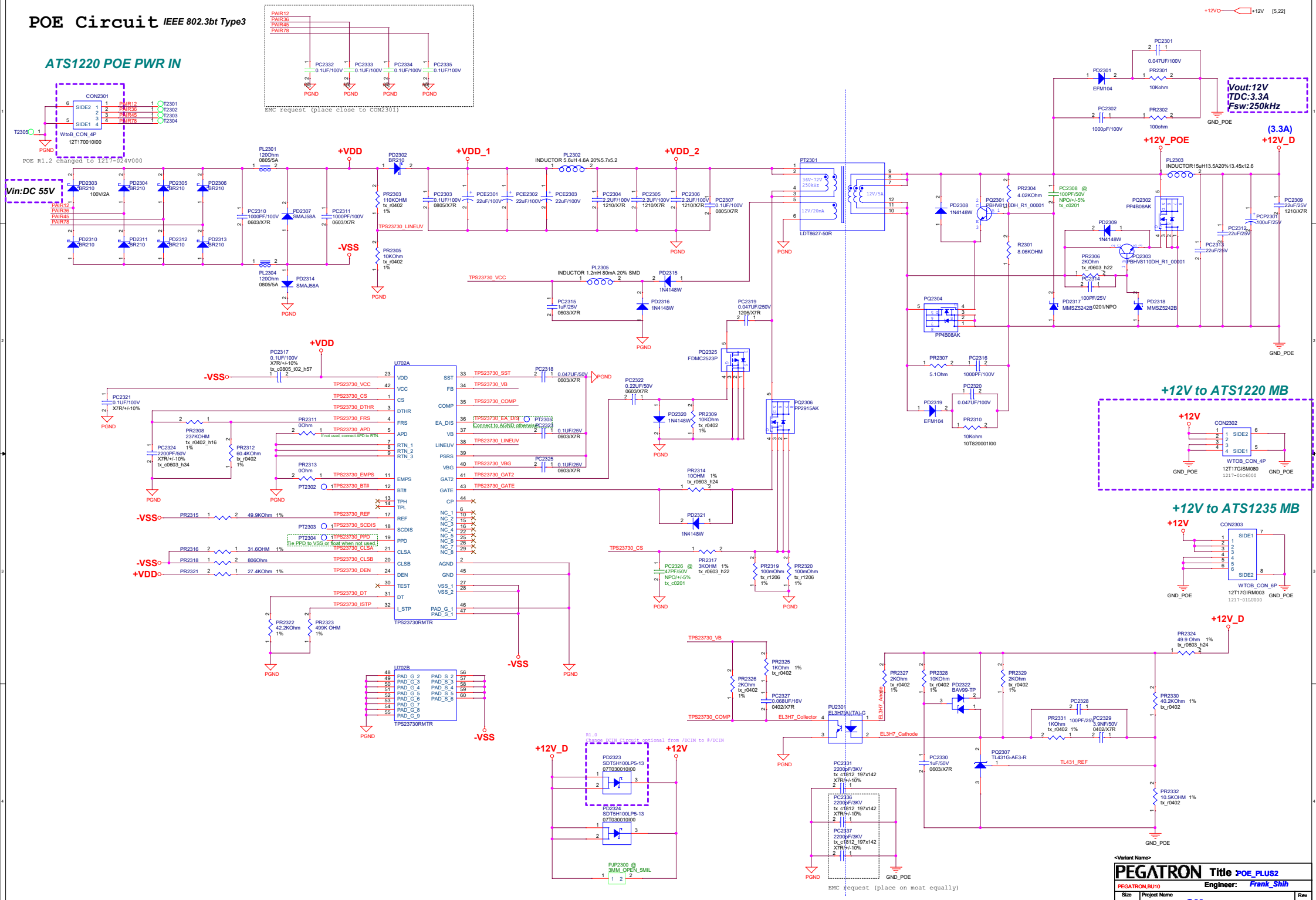
ATS1220 POE PWR IN