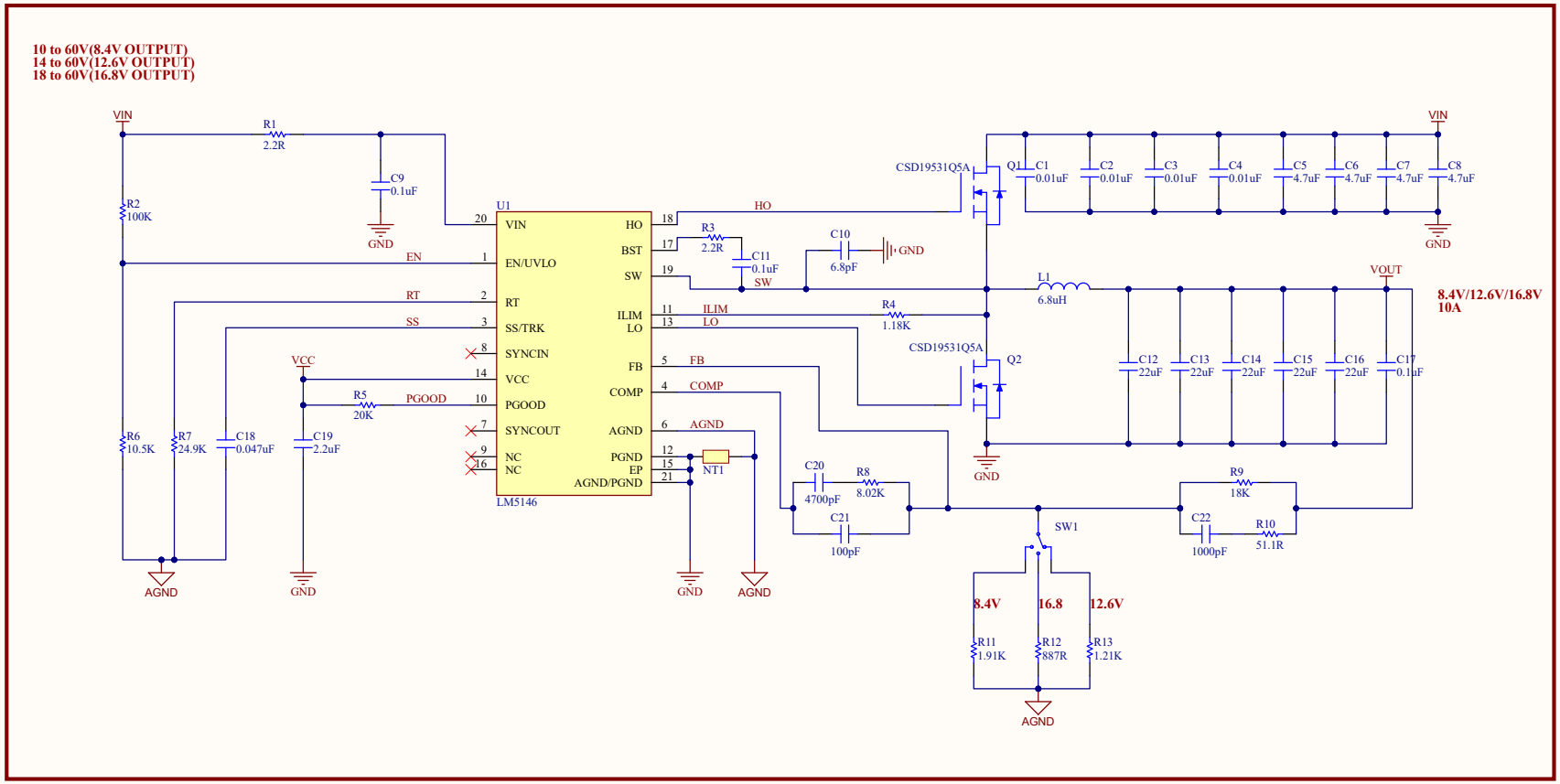
10 to 60V(8.4V OUTPUT)
14 to 60V(12.6V OUTPUT)
18 to 60V(16.8V OUTPUT)
VIN
R1
2.2R
C9
0.1uF
GND
R2
100K
U1
VIN
EN/UVLO
RT
SS/TRK
SYNCIN
VCC
PGOOD
SYNCOUT
NC
NC
HO
BST
SW
ILIM
LO
FB
COMP
AGND
PGND
EP
AGND/PGND
LM5146
EN
RT
SS
VCC
R5
20K
PGOOD
R6
10.5K
R7
24.9K
C18
0.047uF
C19
2.2uF
AGND
GND
HO
R3
2.2R
C11
0.1uF
SW
C10
6.8pF
GND
ILIM
LO
R4
1.18K
FB
COMP
AGND
NT1
C20
4700pF
R8
8.02K
C21
100pF
CSD19531Q5A
Q1
C1
0.01uF
C2
0.01uF
C3
0.01uF
C4
0.01uF
C5
4.7uF
C6
4.7uF
C7
4.7uF
C8
4.7uF
L1
6.8uH
VOUT
8.4V/12.6V/16.8V
10A
CSD19531Q5A
Q2
C12
22uF
C13
22uF
C14
22uF
C15
22uF
C16
22uF
C17
0.1uF
R9
18K
C22
1000pF
R10
51.1R
SW1
8.4V
16.8
12.6V
R11
1.91K
R12
887R
R13
1.21K