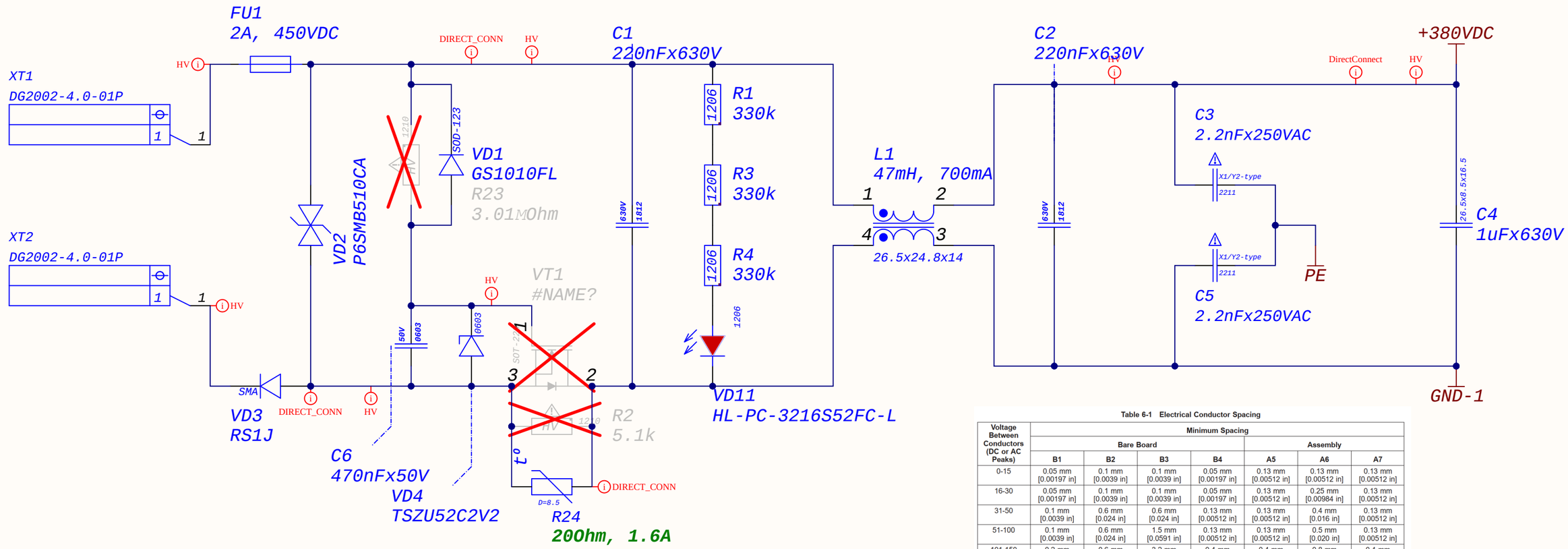

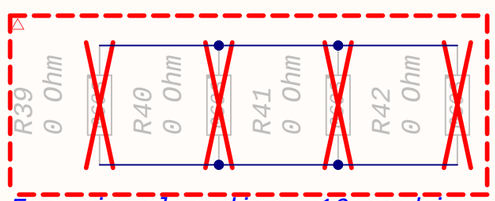

For visual coding, 16 combin.

Table 6-1 Electrical Conductor Spacing

Voltage Between Conductors (DC or AC Peaks)	Minimum Spacing						
	Bare Board				Assembly		
	B1	B2	B3	B4	A5	A6	A7
0-15	0.05 mm [0.00197 in]	0.1 mm [0.0039 in]	0.1 mm [0.0039 in]	0.05 mm [0.00197 in]	0.13 mm [0.00512 in]	0.13 mm [0.00512 in]	0.13 mm [0.00512 in]
16-30	0.05 mm [0.00197 in]	0.1 mm [0.0039 in]	0.1 mm [0.0039 in]	0.05 mm [0.00197 in]	0.13 mm [0.00512 in]	0.25 mm [0.00984 in]	0.13 mm [0.00512 in]
31-50	0.1 mm [0.0039 in]	0.6 mm [0.024 in]	0.6 mm [0.024 in]	0.13 mm [0.00512 in]	0.13 mm [0.00512 in]	0.4 mm [0.016 in]	0.13 mm [0.00512 in]
51-100	0.1 mm [0.0039 in]	0.6 mm [0.024 in]	1.5 mm [0.0591 in]	0.13 mm [0.00512 in]	0.13 mm [0.00512 in]	0.5 mm [0.020 in]	0.13 mm [0.00512 in]
101-150	0.2 mm [0.0079 in]	0.6 mm [0.024 in]	3.2 mm [0.126 in]	0.4 mm [0.016 in]	0.4 mm [0.016 in]	0.8 mm [0.031 in]	0.4 mm [0.016 in]
151-170	0.2 mm [0.0079 in]	1.25 mm [0.0492 in]	3.2 mm [0.126 in]	0.4 mm [0.016 in]	0.4 mm [0.016 in]	0.8 mm [0.031 in]	0.4 mm [0.016 in]
171-250	0.2 mm [0.0079 in]	1.25 mm [0.0492 in]	6.4 mm [0.252 in]	0.4 mm [0.016 in]	0.4 mm [0.016 in]	0.8 mm [0.031 in]	0.4 mm [0.016 in]
251-300	0.2 mm [0.0079 in]	1.25 mm [0.0492 in]	12.5 mm [0.4921 in]	0.4 mm [0.016 in]	0.4 mm [0.016 in]	0.8 mm [0.031 in]	0.8 mm [0.031 in]
301-500	0.25 mm [0.00984 in]	2.5 mm [0.0984 in]	12.5 mm [0.4921 in]	0.8 mm [0.031 in]	0.8 mm [0.031 in]	1.5 mm [0.0591 in]	0.8 mm [0.031 in]
> 500 See para. 6.3 for calc.	0.0025 mm /volt	0.005 mm /volt	0.025 mm /volt	0.00305 mm /volt	0.00305 mm /volt	0.00305 mm /volt	0.00305 mm /volt

B1 - Internal Conductors
B2 - External Conductors, uncoated, sea level to 3050 m [10,007 feet]
B3 - External Conductors, uncoated, over 3050 m [10,007 feet]
B4 - External Conductors, with permanent polymer coating (any elevation)
A5 - External Conductors, with conformal coating over assembly (any elevation)
A6 - External Component lead/termination, uncoated, sea level to 3050 m [10,007 feet]
A7 - External Component lead termination, with conformal coating (any elevation)

4 Device Comparison Table

Device	Integrated High-Voltage Startup	Integrated X-Capacitor Discharge	Input-Voltage (BLK) OVP	PFC On/Off Output
UCC256601	Yes	Yes	No	No
UCC256602	Yes	No	Yes	No
UCC256603	No	No	No	No
UCC256604	Yes	Yes	No	Yes

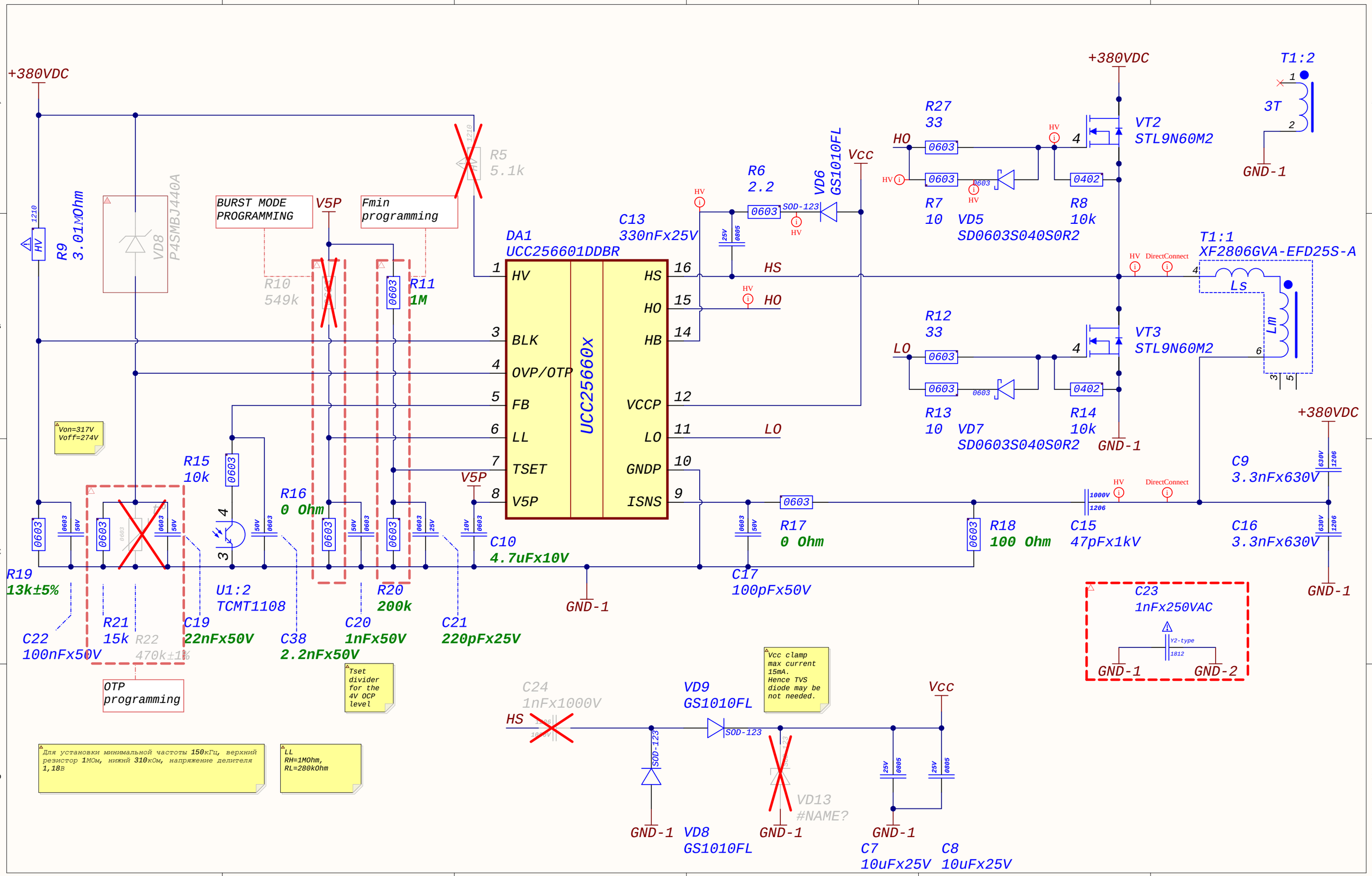
+380VDC
R9
3.01MOhm
VD8
P4SMBJ440A
BURST MODE
PROGRAMMING
V5P
Fmin
programming
R5
5.1k
R10
549k
R11
1M
DA1
UCC256601DDBR
UCC25660X
HV
BLK
OVP/OTP
FB
LL
TSET
V5P
HS
HO
HB
VCCP
LO
GNDP
ISNS
C13
330nFx25V
R6
2.2
VD6
GS1010FL
Vcc
R27
33
HO
R7
10
VD5
SD0603S040S0R2
R8
10k
VT2
STL9N60M2
T1:2
3T
GND-1
T1:1
XF2806GVA-EFD25S-A
Ls
Lm
DirectConnect
R12
33
LO
R13
10
VD7
SD0603S040S0R2
R14
10k
VT3
STL9N60M2
Von=317V
Voff=274V
R15
10k
R16
0 Ohm
U1:2
TCMT1108
R19
13k±5%
R21
15k
R22
470k±1%
C22
100nFx50V
C19
22nFx50V
C38
2.2nFx50V
R20
200k
C20
1nFx50V
C21
220pFx25V
C10
4.7uFx10V
R17
0 Ohm
C17
100pFx50V
R18
100 Ohm
C15
47pFx1kV
C9
3.3nFx630V
C16
3.3nFx630V
C23
1nFx250VAC
Y2-type
GND-2
OTP
programming
Tset
divider
for the
4V OCP
level
Vcc clamp
max current
15mA.
Hence TVS
diode may be
not needed.
C24
1nFx1000V
VD9
GS1010FL
VD8
GS1010FL
VD13
#NAME?
C7
10uFx25V
C8
10uFx25V
Для установки минимальной частоты 150кГц, верхний резистор 1МОм, нижнй 310кОм, напряжение делителя 1,18в
LL
RH=1MOhm,
RL=280kOhm
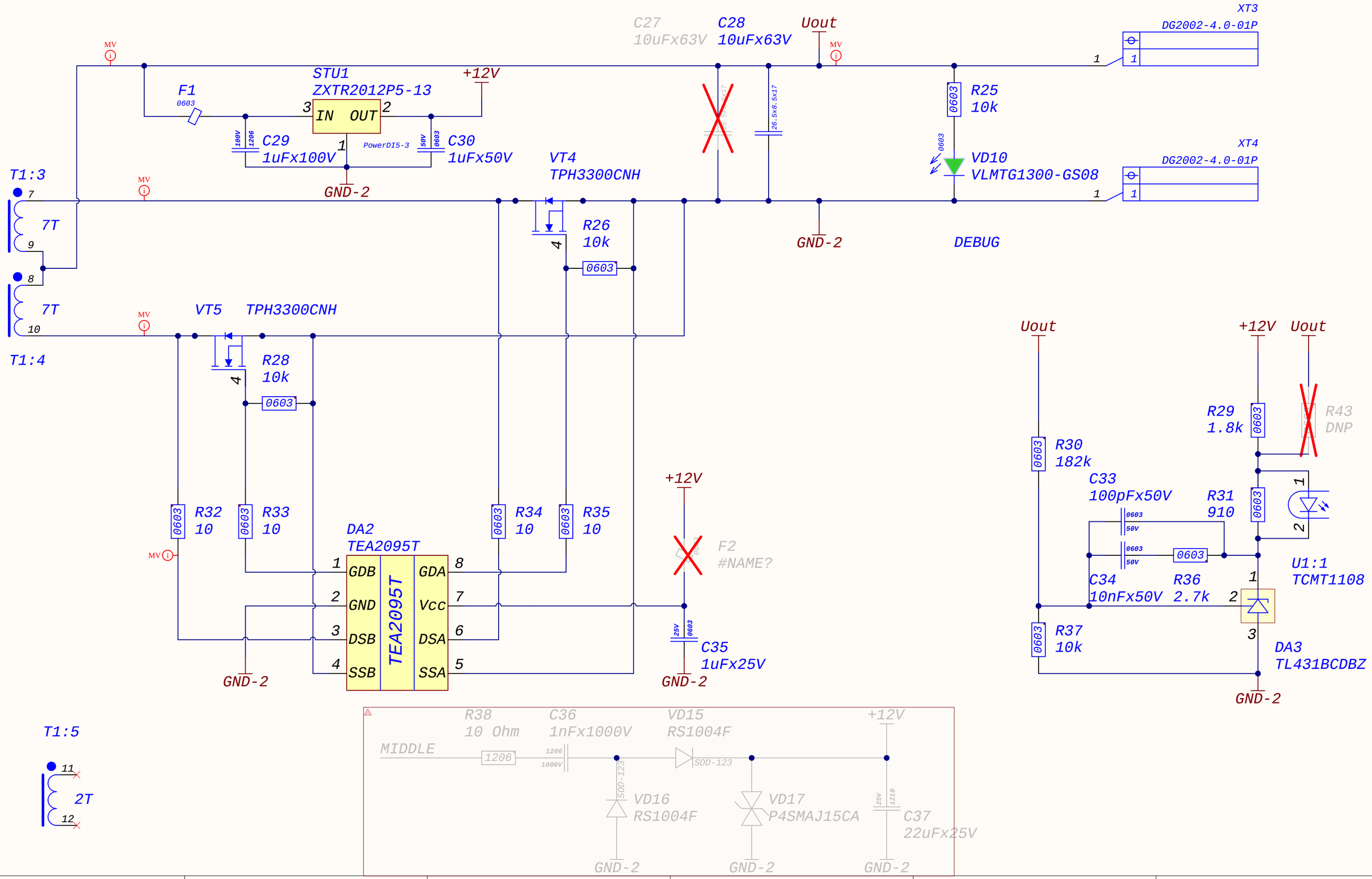
Voltage Derating	Above +85°C DC and AC voltage derating is 1.25%/°C