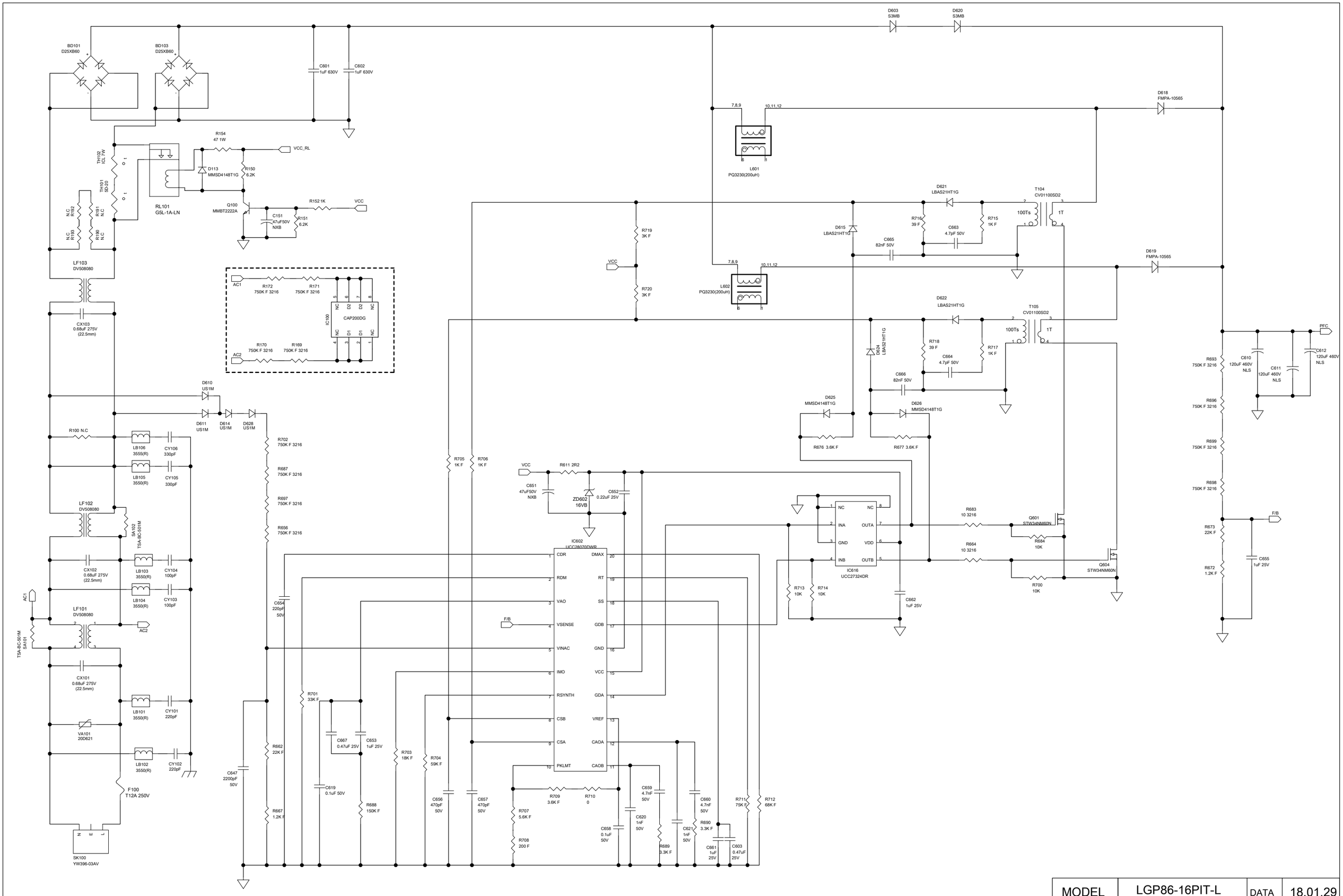

MODEL	LGP86-16PIT-L	DATA	18.01.29
BLOCK	AC IN / PFC	SHEET	1/3