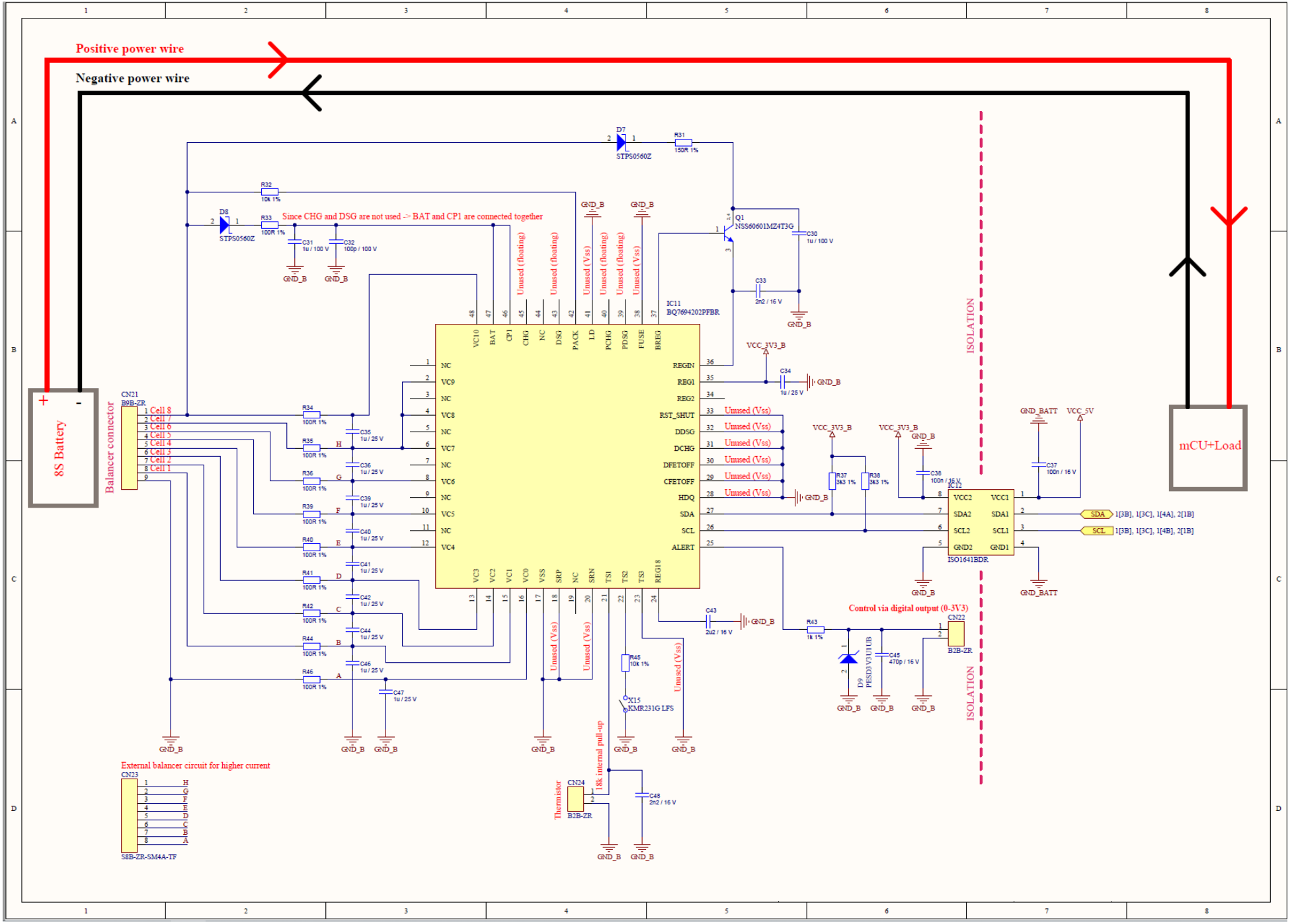

Positive power wire
Negative power wire
8S Battery
mCU+Load
Balancer connector
CN21
B9B-ZR
Cell 8
Cell 7
Cell 6
Cell 5
Cell 4
Cell 3
Cell 2
Cell 1
D7
STPS0560Z
R31
150R 1%
R32
10k 1%
D8
STPS0560Z
R33
100R 1%
Since CHG and DSG are not used -> BAT and CP1 are connected together
C31
1u / 100 V
C32
100p / 100 V
GND_B
Q1
NSS60601MZ4T3G
C30
1u / 100 V
C33
2n2 / 16 V
IC11
BQ7694202PFBR
Unused (floating)
Unused (Vss)
VC10
BAT
CP1
CHG
NC
DSG
PACK
LD
PCHG
PDSG
FUSE
BREG
REGIN
REG1
REG2
RST_SHUT
DDSG
DCHG
DFETOFF
CFETOFF
HDQ
SDA
SCL
ALERT
VC9
VC8
VC7
VC6
VC5
VC4
VC3
VC2
VC1
VC0
VSS
SRP
SRN
TS1
TS2
TS3
REG18
VCC_3V3_B
C34
1u / 25 V
R34
100R 1%
R35
100R 1%
R36
100R 1%
R39
100R 1%
R40
100R 1%
R41
100R 1%
R42
100R 1%
R44
100R 1%
R46
100R 1%
C35
1u / 25 V
C36
1u / 25 V
C39
1u / 25 V
C40
1u / 25 V
C41
1u / 25 V
C42
1u / 25 V
C44
1u / 25 V
C46
1u / 25 V
C47
1u / 25 V
R37
3k3 1%
R38
3k3 1%
C38
100n / 16 V
IC12
ISO1641BDR
VCC2
VCC1
SDA2
SDA1
SCL2
SCL1
GND2
GND1
GND_BATT
VCC_5V
C37
100n / 16 V
SDA
SCL
1[3B], 1[3C], 1[4A], 2[1B]
1[3B], 1[3C], 1[4B], 2[1B]
ISOLATION
C43
2u2 / 16 V
R43
1k 1%
Control via digital output (0-3V3)
CN22
B2B-ZR
D9
PESD3V3U1UB
C45
470p / 16 V
R45
10k 1%
X15
KMR231G LFS
18k internal pull-up
Thermistor
CN24
B2B-ZR
C48
2n2 / 16 V
External balancer circuit for higher current
CN23
S8B-ZR-SM4A-TF