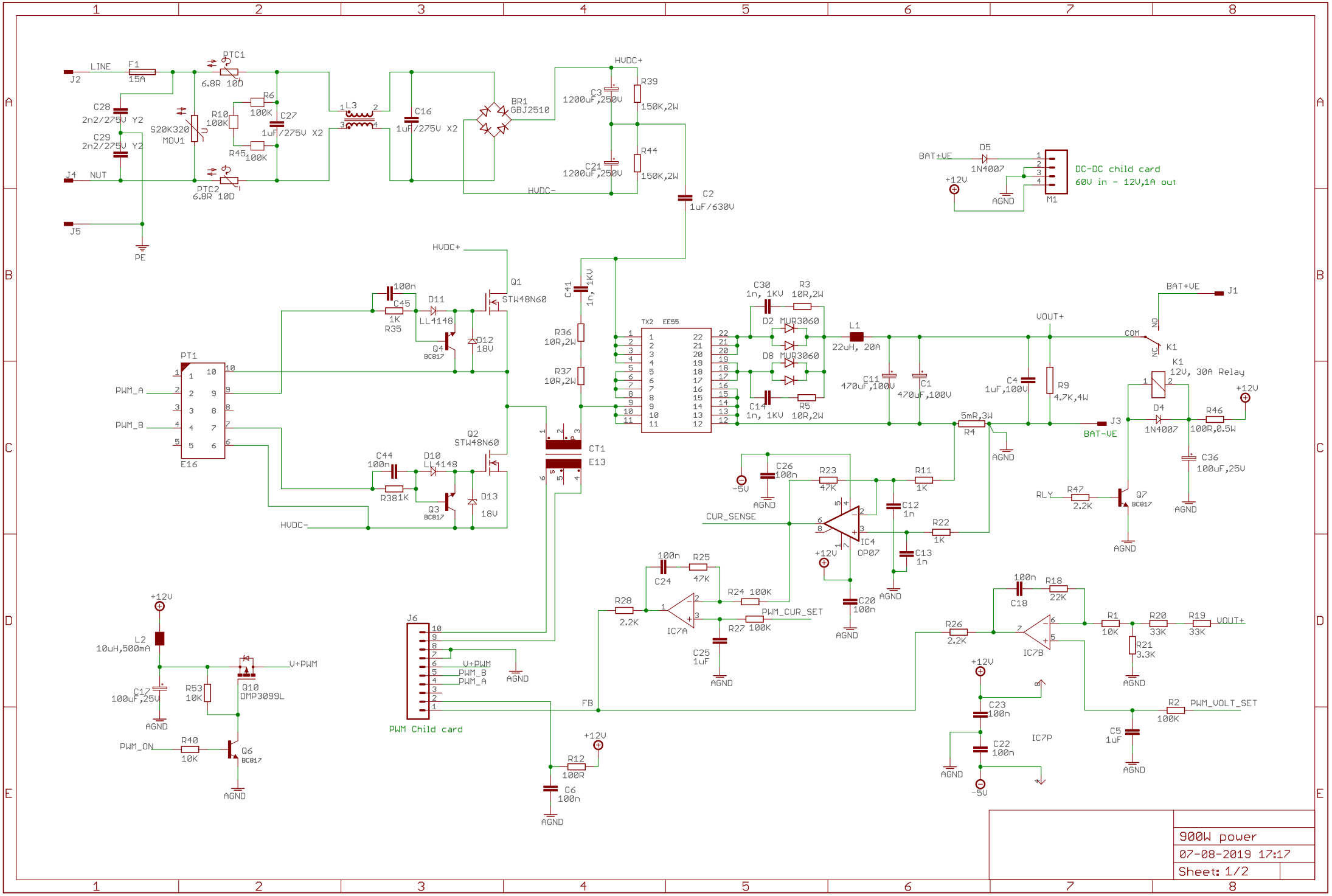
LINE
J2
F1
15A
PTC1
6.8R 10D
C28
2n2/275V Y2
C29
2n2/275V Y2
S20K320
MOV1
R10
100K
R6
100K
C27
1uF/275V X2
R45
100K
J4
NUT
PTC2
6.8R 10D
J5
PE
L3
C16
1uF/275V X2
BR1
GBJ2510
HVDC+
C3
1200uF,250V
R39
150K,2W
C21
1200uF,250V
R44
150K,2W
HVDC-
C2
1uF/630V
BAT+VE
D5
1N4007
+12V
AGND
DC-DC child card
60V in - 12V,1A out
M1
HVDC+
Q1
STW48N60
C45
100n
1K
R35
D11
LL4148
Q4
BC817
D12
18V
PT1
PWM_A
PWM_B
E16
C44
100n
R381K
D10
LL4148
Q3
BC817
D13
18V
Q2
STW48N60
HVDC-
C41
1n, 1KV
R36
10R,2W
R37
10R,2W
CT1
E13
TX2 EE55
C30
1n, 1KV
R3
10R,2W
D2 MUR3060
D8 MUR3060
C14
1n, 1KV
R5
10R,2W
L1
22uH, 20A
C11
470uF,100V
C1
470uF,100V
VOUT+
C4
1uF,100V
R9
4.7K,4W
BAT+VE
J1
COM
NO
NC
K1
K1
12V, 30A Relay
+12V
D4
1N4007
R46
100R,0.5W
C36
100uF,25V
5mR,3W
R4
J3
BAT-VE
AGND
-5V
C26
100n
R23
47K
R11
1K
C12
1n
CUR_SENSE
IC4
OP07
R22
1K
C13
1n
C20
100n
RLY
R47
2.2K
Q7
BC817
100n
R25
47K
C24
R24 100K
R28
2.2K
IC7A
PWM_CUR_SET
R27 100K
C25
1uF
J6
V+PWM
PWM_B
PWM_A
PWM Child card
FB
+12V
R12
100R
C6
100n
L2
10uH,500mA
V+PWM
Q10
DMP3099L
C17
100uF,25V
R53
10K
PWM_ON
R40
10K
Q6
BC817
100n
R18
22K
C18
R26
2.2K
IC7B
R1
10K
R20
33K
R19
33K
VOUT+
R21
3.3K
R2
100K
PWM_VOLT_SET
C5
1uF
C23
100n
C22
100n
IC7P
900W power
07-08-2019 17:17
Sheet: 1/2

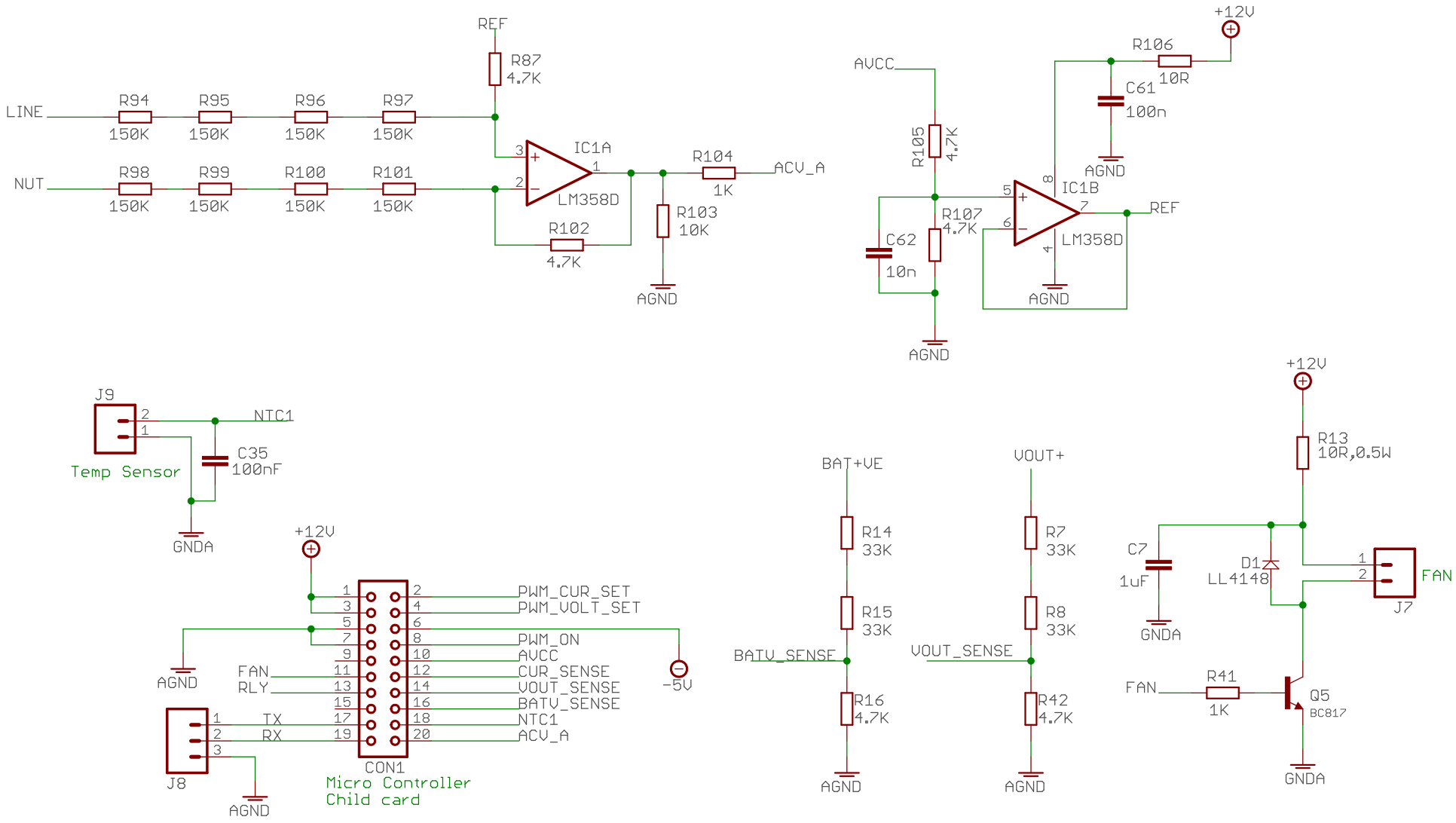

900W power

07-08-2019 17:17

Sheet: 2/2