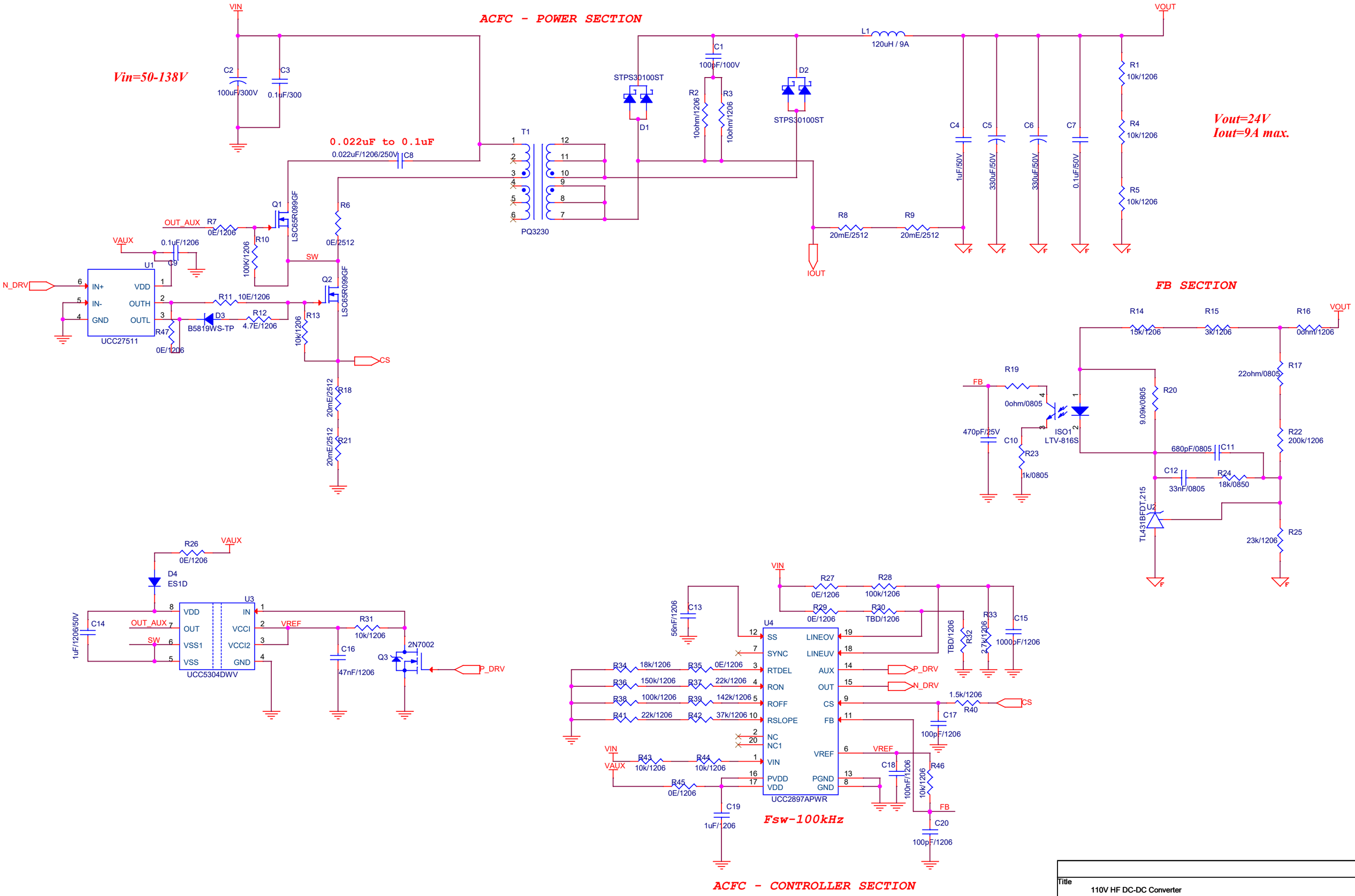

Title	110V HF DC-DC Converter	
Size A3	Document Number 00	Rev 00
Date: Tuesday, December 30, 2025	Sheet 1 of 1	