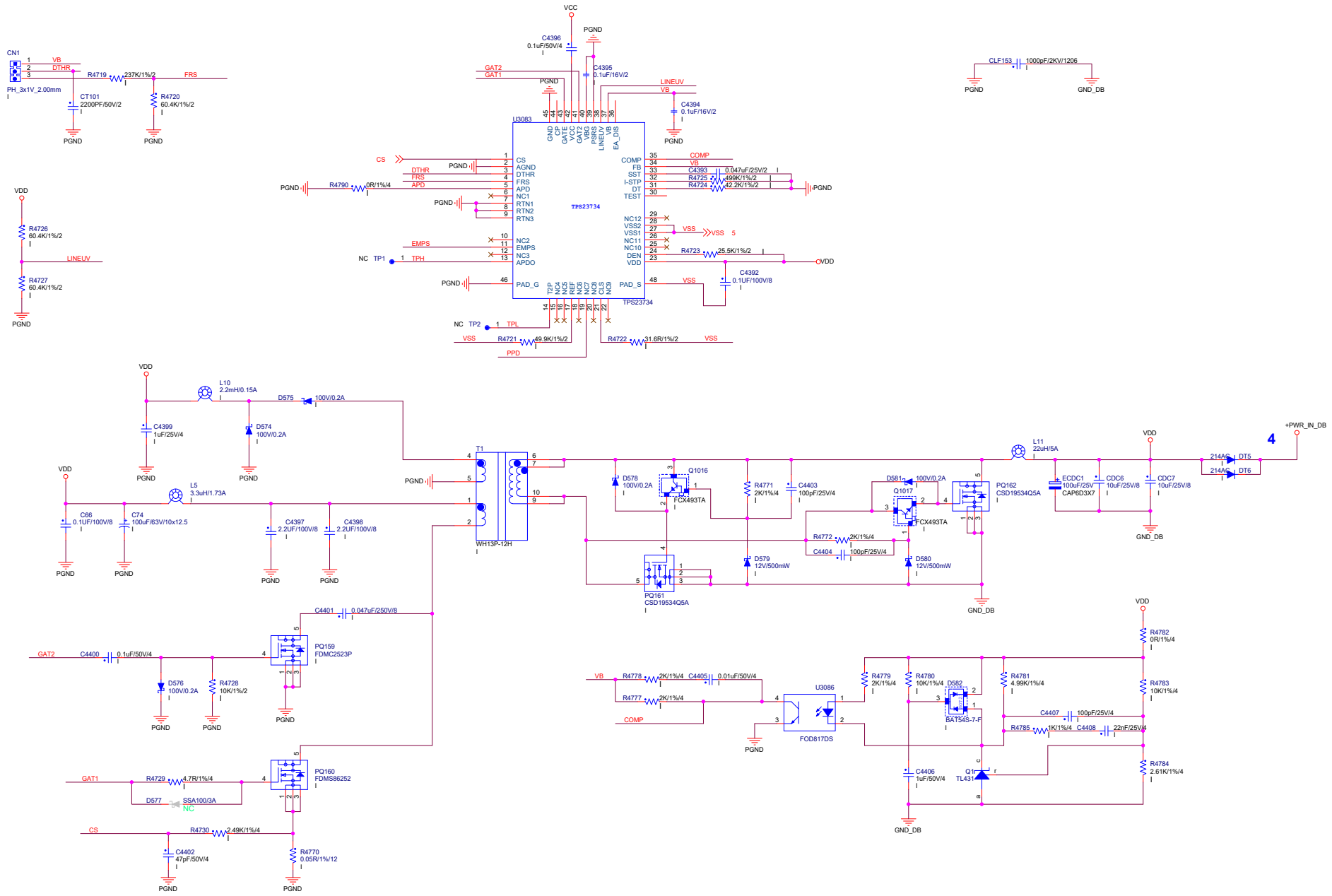

普瑞吉电子有限公司

Title	Cover Page	
Size C	Document Number R3 Project	Rev R0.1
Date: Sunday, July 20, 2025	Sheet 2 of 50	