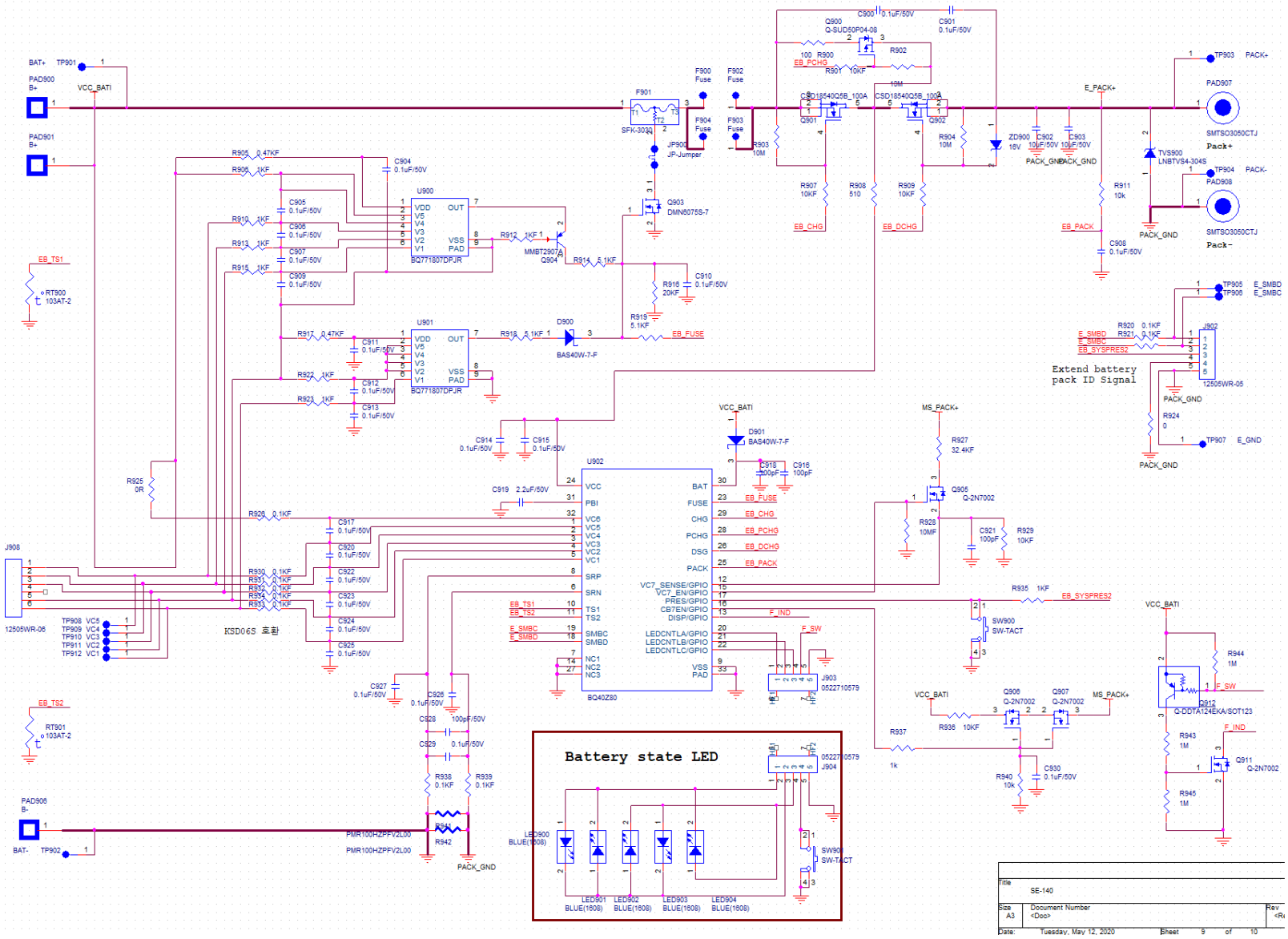

Title	SE-140	
Size A3	Document Number <Doc>	Rev <Re
Date: Tuesday, May 12, 2020	Sheet 9 of 10	