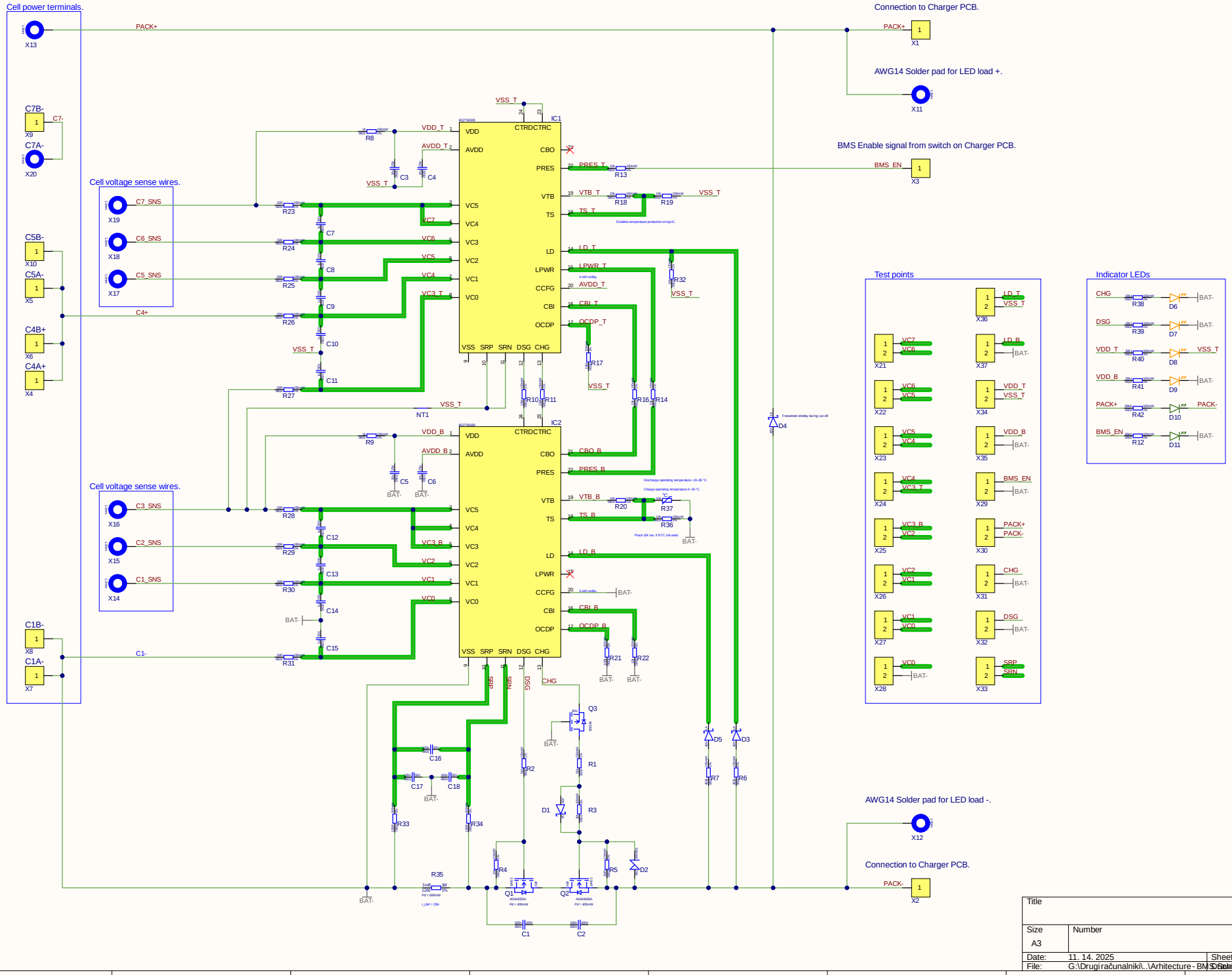
Cell power terminals.
Connection to Charger PCB.
AWG14 Solder pad for LED load +.
BMS Enable signal from switch on Charger PCB.
Cell voltage sense wires.
Cell voltage sense wires.
Test points
Indicator LEDs
AWG14 Solder pad for LED load -.
Connection to Charger PCB.
PACK+
PACK-
BMS_EN
C7-
C4+
C1-
VDD_T
AVDD_T
VDD_B
AVDD_B
VSS_T
NT1
BAT-
IC1
IC2
CTRDCTRC
VDD
AVDD
CBO
PRES
VTB
TS
LD
LPWR
CCFG
CBI
OCDP
VC5
VC4
VC3_T
VC3_B
VC2
VC1
VC0
VSS
SRP
SRN
DSG
CHG
Title
Size
A3
Number
Revision
Date:
11. 14. 2025
Sheet of
File:
G:\Drugi računalniki\..\Arhitecture - BMS.SchDoc
Drawn By: