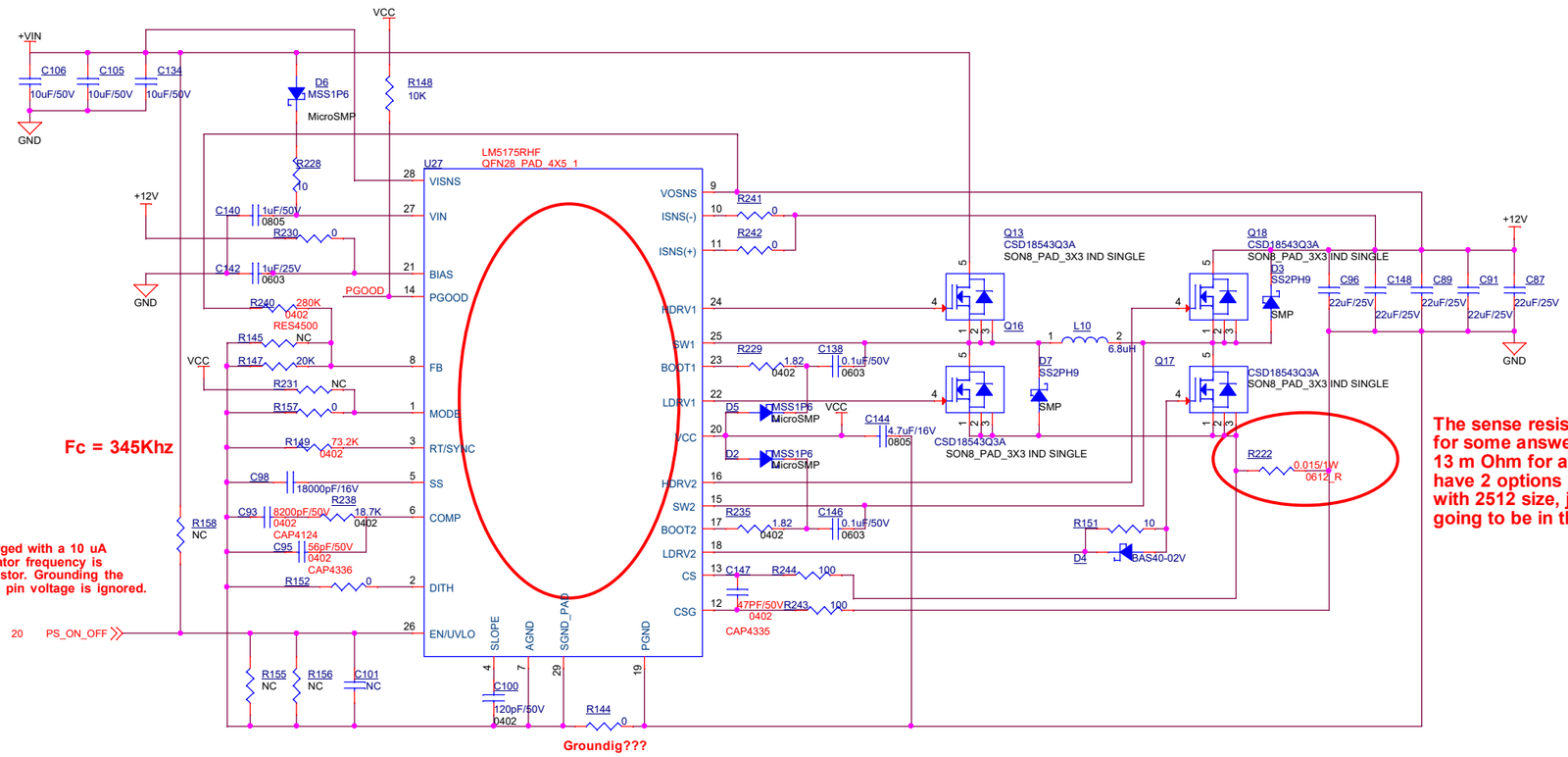


**Note 1**
**Mode = GND, DCM, Hiccup Disabled (Set RMODE resistor to GND = 0 Ohm)**
**Mode = 1.00 V, DCM, Hiccup Enabled (Set RMODE resistor to GND = 49.9 k Ohm)**
**Mode = 1.85 V, CCM, Hiccup Enabled (Set RMODE resistor to GND = 93.1 k Ohm)**
**Mode = VCC, CCM, Hiccup Disabled (Set RMODE resistor to VCC = 0 Ohm)**

**Fc = 345Khz**

**Note 2**
**A capacitor connected between the DITH pin and AGND is charged and discharged with a 10 uA current source. As the voltage on the DITH pin ramps up and down the oscillator frequency is modulated between –5% and +5% of the nominal frequency set by the RT resistor. Grounding the DITH pin will disable the dithering feature. In the external Sync mode, the DITH pin voltage is ignored.**

# 12V/3A

**The sense resistor is not final waiting for some answers but it as to be 11 to 13 m Ohm for a 3A output power. we have 2 options ,one with 1206 and one with 2512 size, just one of them is going to be in the circuit/**

## All parts marked witg green circle has to replaced by the correct Aitech PN from Data base

## New Parts Requiered

**Resistor 73.2K 0402**

**Controller LM5175RHF from TI VQFN-28**

| Function | Name | Date | Signature |
|---|---|---|---|
| Q.M. | Ofer Cohen | 26.04.17 | |
| Approved by | Boris Baer | 26.04.17 | |
| Checked by | Avi Luzon | 26.04.17 | |
| Checked by | Ofer Caduri | 26.04.17 | |

Description: **microSD**

AITECH proprietary information
Copyright - AITECH SYSTEMS LTD. 2017

Product Name: **B050**
Product Description: **A176 - Cyclone**
Document Number: ESMB050-00
Page Size: C
File Name: ESMB050.DSN
Configuration: <Variant Name>
Revision: 2.0
Sheet 11 Of