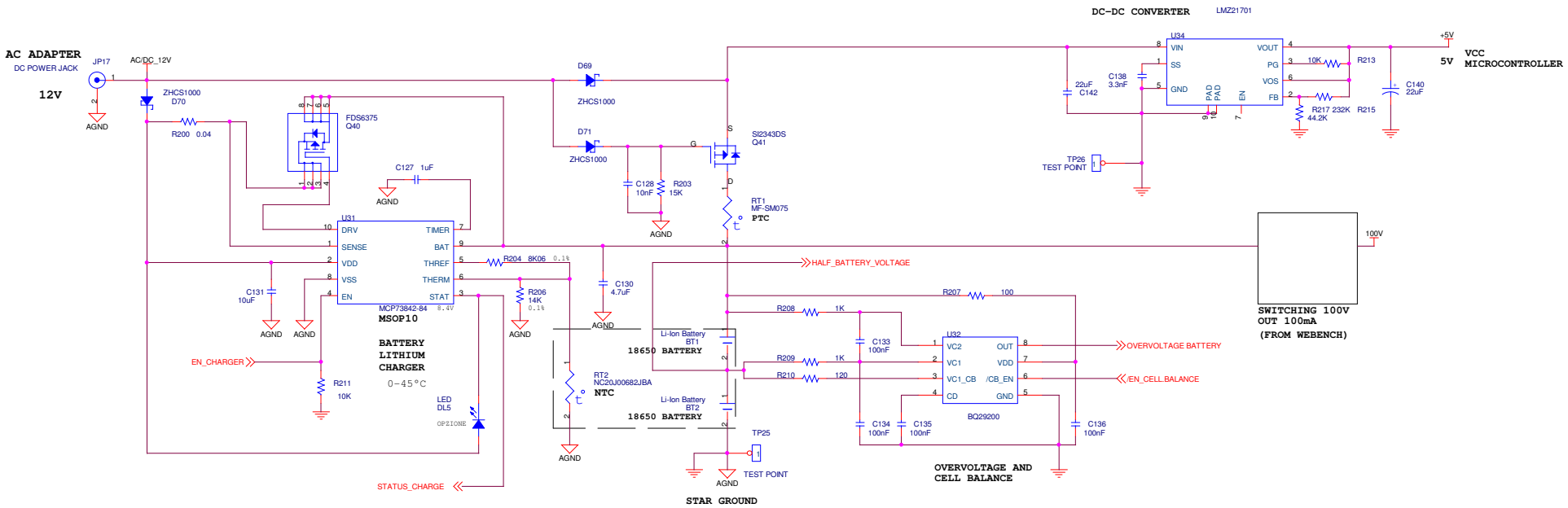

Title	BATTERY POWER	
Size C	Document Number <Doc>	Rev 0
Date: Monday, July 30, 2018	Sheet 1 of 1	