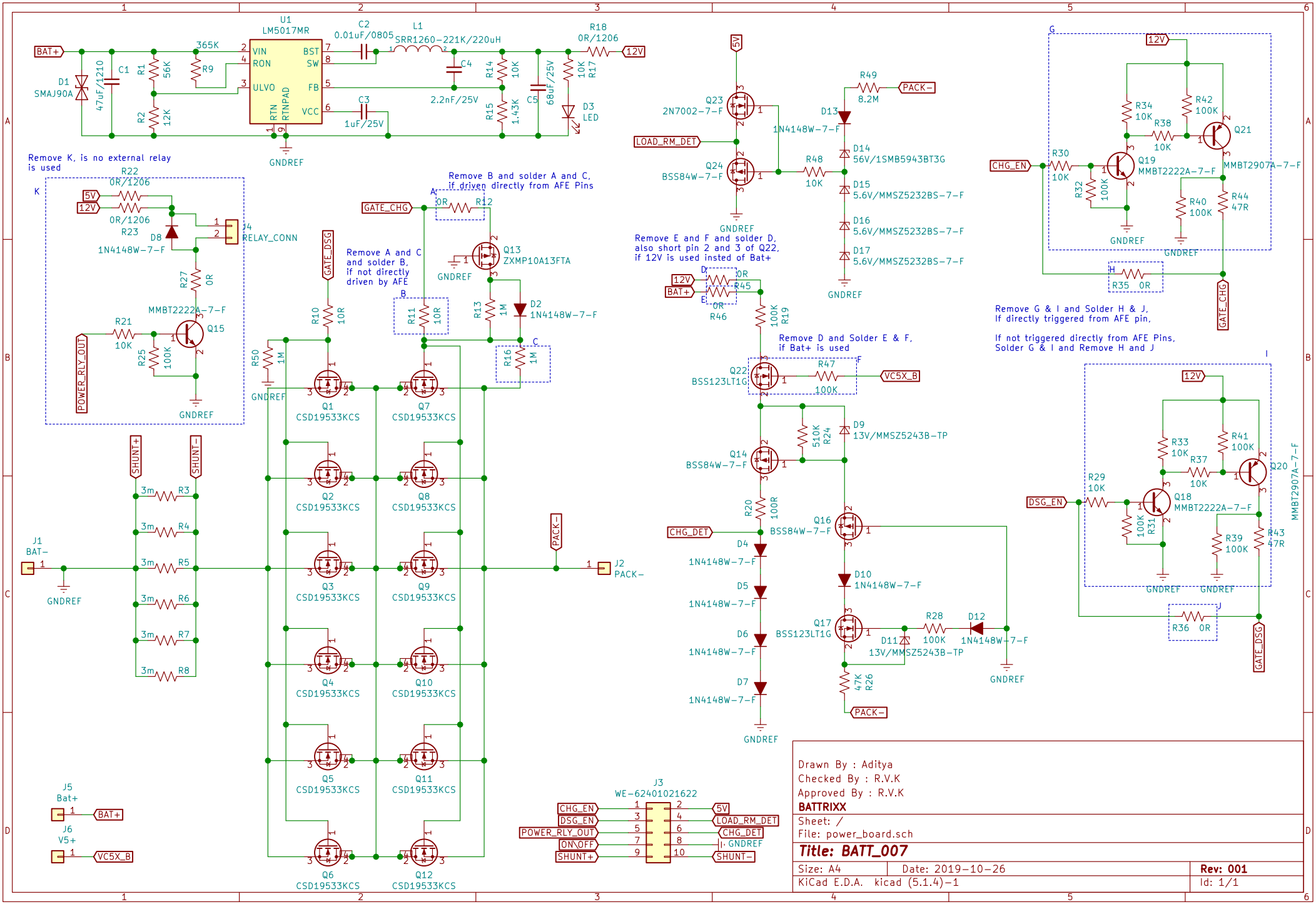

Drawn By : Aditya
Checked By : R.V.K
Approved By : R.V.K
BATTRIXX
Sheet: /
File: power_board.sch

Title: BATT_007

Size: A4	Date: 2019-10-26	**Rev: 001**
KiCad E.D.A. kicad (5.1.4)-1		Id: 1/1