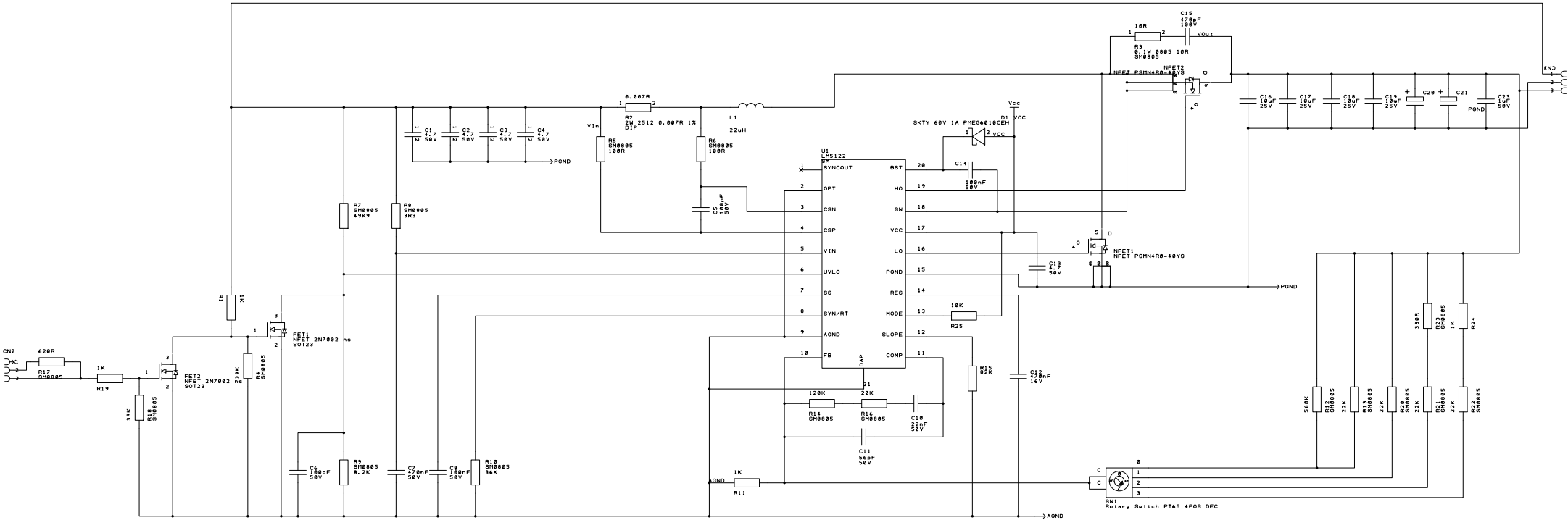MERGE THE GROUNDS LAST BEFORE GENERATING THE GERBERS