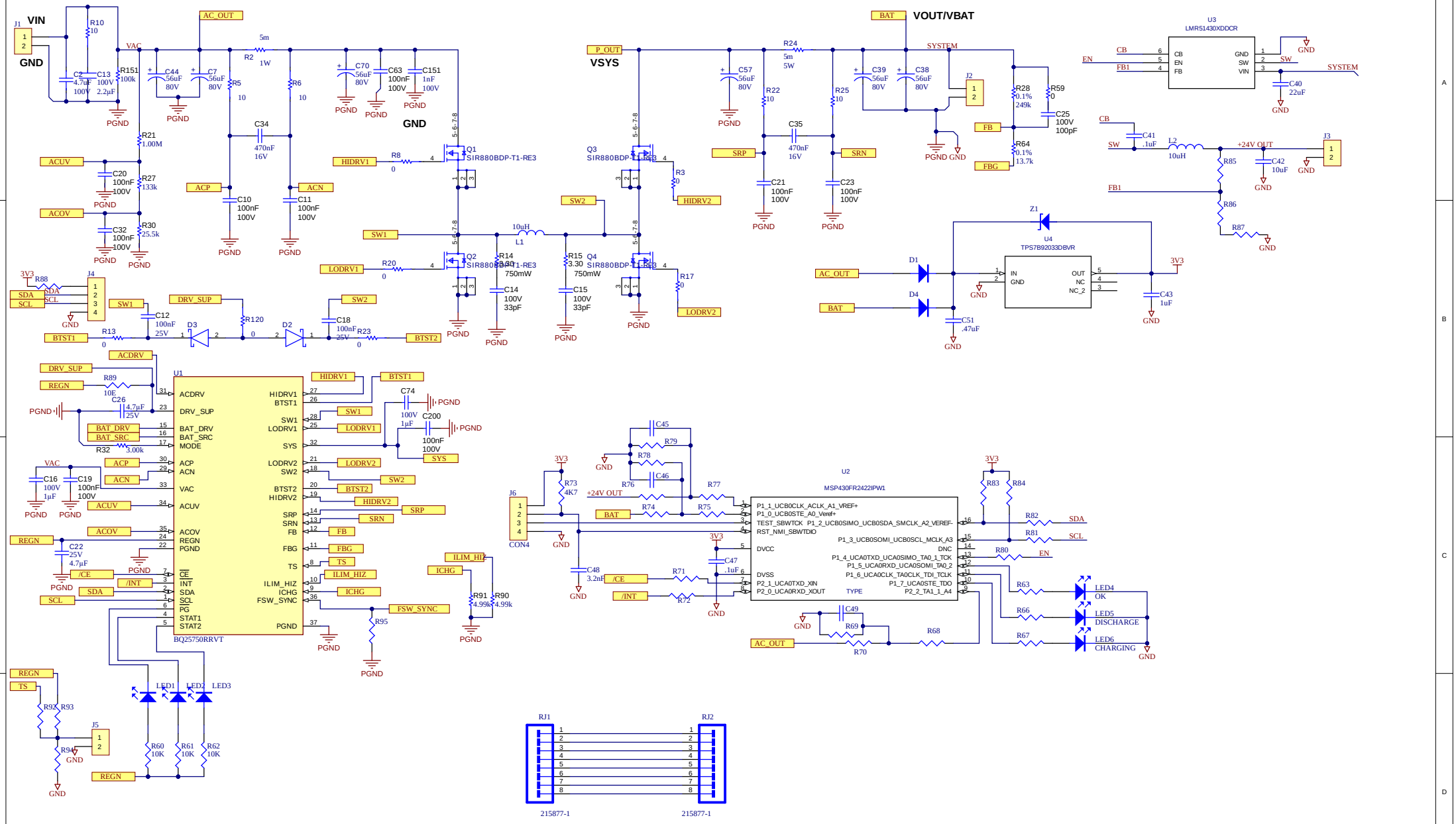

Orderable:		Designed for:	Mod. Date: 18-02-2025
TID #:		Project Title:	
Number:	Rev:	Sheet Title:	
SVN Rev: Not in version control		Assembly Variant: [No Variations]	Sheet: 1 of 4
Drawn By: Pengzhao Zhu		File: BMS042A_SCH_page1IGS.SchDoc	Size: B
Engineer:		Contact:	

Texas Instruments and/or its licensors do not warrant the accuracy or completeness of this specification or any information contained therein. Texas Instruments and/or its licensors do not warrant that this design will meet the specifications, will be suitable for your application or fit for any particular purpose, or will operate in an implementation. Texas Instruments and/or its licensors do not warrant that the design is production worthy. You should completely validate and test your design implementation to confirm the system functionality for your application.

Texas Instruments
http://www.ti.com
© Texas Instruments

Comment	Description	Designator	Footprint	LibRef	Quantity