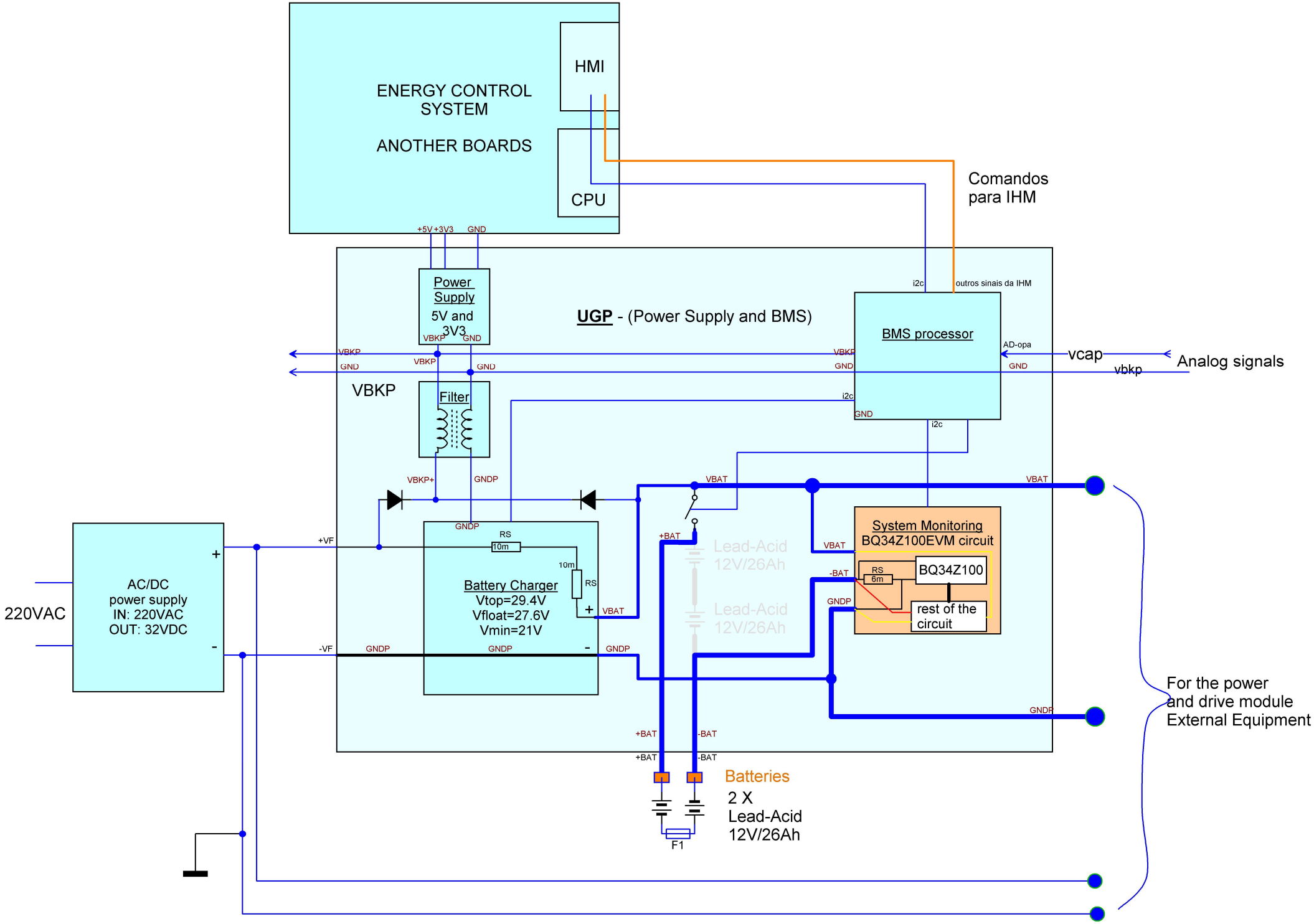
ENERGY CONTROL SYSTEM
ANOTHER BOARDS
HMI
CPU
Comandos para IHM
+5V +3V3 GND
Power Supply
5V and 3V3
VBKP GND
UGP - (Power Supply and BMS)
i2c
outros sinais da IHM
BMS processor
AD-opa
vcap
vbkp
Analog signals
VBKP
GND
Filter
VBKP+
GNDP
VBAT
+VF
-VF
RS
10m
Battery Charger
Vtop=29.4V
Vfloat=27.6V
Vmin=21V
+BAT
-BAT
Lead-Acid 12V/26Ah
System Monitoring
BQ34Z100EVM circuit
BQ34Z100
RS
6m
rest of the circuit
AC/DC
power supply
IN: 220VAC
OUT: 32VDC
220VAC
For the power and drive module External Equipment
Batteries
2 X
Lead-Acid
12V/26Ah
F1