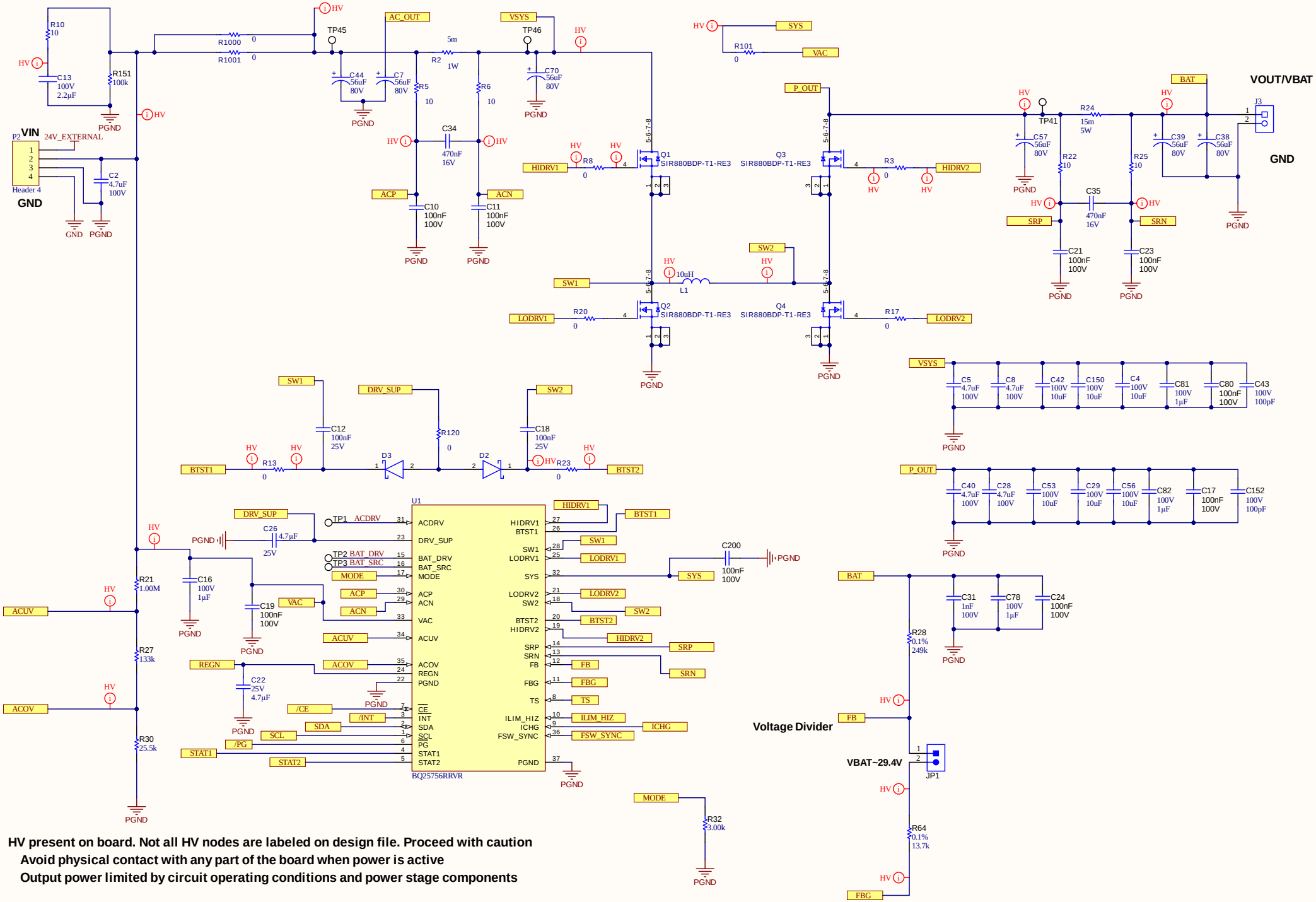

HV present on board. Not all HV nodes are labeled on design file. Proceed with caution

Avoid physical contact with any part of the board when power is active

Output power limited by circuit operating conditions and power stage components

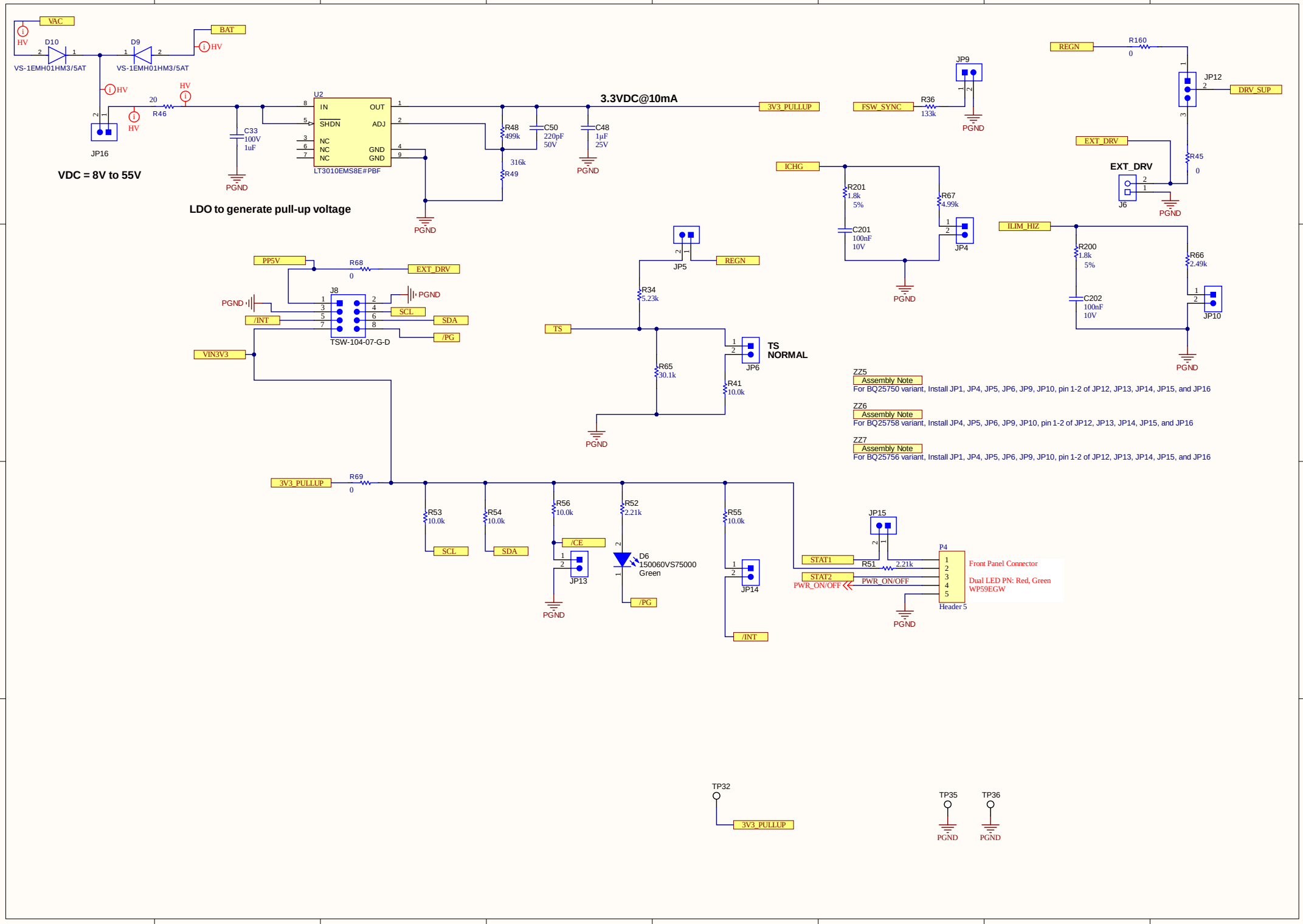
VAC
BAT
D10
D9
VS-1EMH01HM3/5AT
VS-1EMH01HM3/5AT
HV
JP16
VDC = 8V to 55V
R46
20
C33
100V
1uF
U2
IN
OUT
SHDN
ADJ
NC
NC
NC
GND
GND
LT3010EMS8E#PBF
LDO to generate pull-up voltage
PGND
R48
499k
316k
R49
C50
220pF
50V
C48
1µF
25V
3.3VDC@10mA
3V3_PULLUP
FSW_SYNC
R36
133k
JP9
REGN
R160
0
JP12
DRV_SUP
EXT_DRV
R45
0
J6
ICHG
R201
1.8k
5%
C201
100nF
10V
R67
4.99k
JP4
ILIM_HIZ
R200
1.8k
5%
C202
100nF
10V
R66
2.49k
JP10
PP5V
R68
0
EXT_DRV
J8
TSW-104-07-G-D
/INT
SCL
SDA
/PG
VIN3V3
JP5
REGN
R34
5.23k
TS
R65
30.1k
R41
10.0k
JP6
TS
NORMAL
ZZ5
Assembly Note
For BQ25750 variant, Install JP1, JP4, JP5, JP6, JP9, JP10, pin 1-2 of JP12, JP13, JP14, JP15, and JP16
ZZ6
Assembly Note
For BQ25758 variant, Install JP4, JP5, JP6, JP9, JP10, pin 1-2 of JP12, JP13, JP14, JP15, and JP16
ZZ7
Assembly Note
For BQ25756 variant, Install JP1, JP4, JP5, JP6, JP9, JP10, pin 1-2 of JP12, JP13, JP14, JP15, and JP16
R69
0
R53
10.0k
R54
10.0k
R56
10.0k
R52
2.21k
R55
10.0k
/CE
JP13
D6
150060VS75000
Green
/PG
JP14
/INT
JP15
STAT1
STAT2
PWR_ON/OFF
R51
2.21k
P4
Header 5
Front Panel Connector
Dual LED PN: Red, Green
WP59EGW
TP32
TP35
TP36

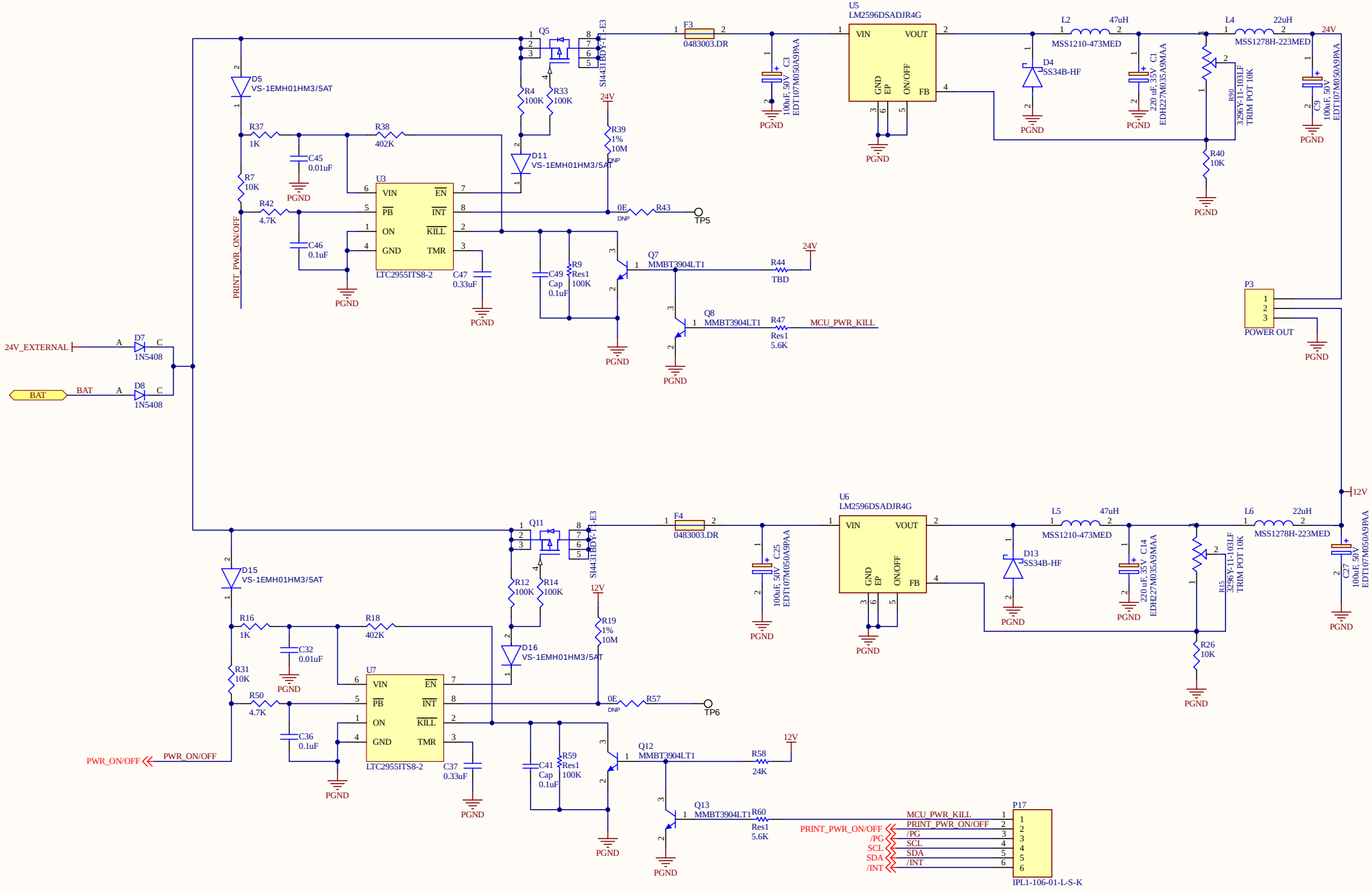
U5
LM2596DSADJR4G
VIN
VOUT
GND
EP
ON/OFF
FB
L2
47uH
MSS1210-473MED
L4
22uH
MSS1278H-223MED
24V
D4
SS34B-HF
C1
220 uF, 35V
EDH227M035A9MAA
R90
3296Y-1-103LF
TRIM POT 10K
C9
100uF, 50V
EDT107M050A9PAA
R40
10K
PGND
Q5
SI4431BDY-T1-E3
F3
0483003.DR
C3
100uF, 50V
EDT107M050A9PAA
D5
VS-1EMH01HM3/5AT
R37
1K
R38
402K
C45
0.01uF
R7
10K
R42
4.7K
C46
0.1uF
PRINT_PWR_ON/OFF
U3
LTC2955ITS8-2
VIN
EN
PB
INT
ON
KILL
GND
TMR
C47
0.33uF
R4
100K
R33
100K
D11
VS-1EMH01HM3/5AT
R39
1%
10M
DNP
0E
R43
TP5
C49
Cap
0.1uF
R9
Res1
100K
Q7
MMBT3904LT1
R44
TBD
Q8
MMBT3904LT1
R47
Res1
5.6K
MCU_PWR_KILL
P3
POWER OUT
24V_EXTERNAL
D7
1N5408
BAT
D8
1N5408
U6
LM2596DSADJR4G
L5
47uH
MSS1210-473MED
L6
22uH
MSS1278H-223MED
12V
D13
SS34B-HF
C14
220 uF, 35V
EDH227M035A9MAA
R15
3296Y-1-103LF
TRIM POT 10K
C27
100uF, 50V
EDT107M050A9PAA
R26
10K
Q11
SI4431BDY-T1-E3
F4
0483003.DR
C25
100uF, 50V
EDT107M050A9PAA
D15
VS-1EMH01HM3/5AT
R16
1K
R18
402K
C32
0.01uF
R31
10K
R50
4.7K
C36
0.1uF
PWR_ON/OFF
U7
LTC2955ITS8-2
C37
0.33uF
R12
100K
R14
100K
D16
VS-1EMH01HM3/5AT
R19
1%
10M
0E
R57
TP6
C41
Cap
0.1uF
R59
Res1
100K
Q12
MMBT3904LT1
R58
24K
Q13
MMBT3904LT1
R60
Res1
5.6K
P17
IPL1-106-01-L-S-K
MCU_PWR_KILL
PRINT_PWR_ON/OFF
/PG
SCL
SDA
/INT