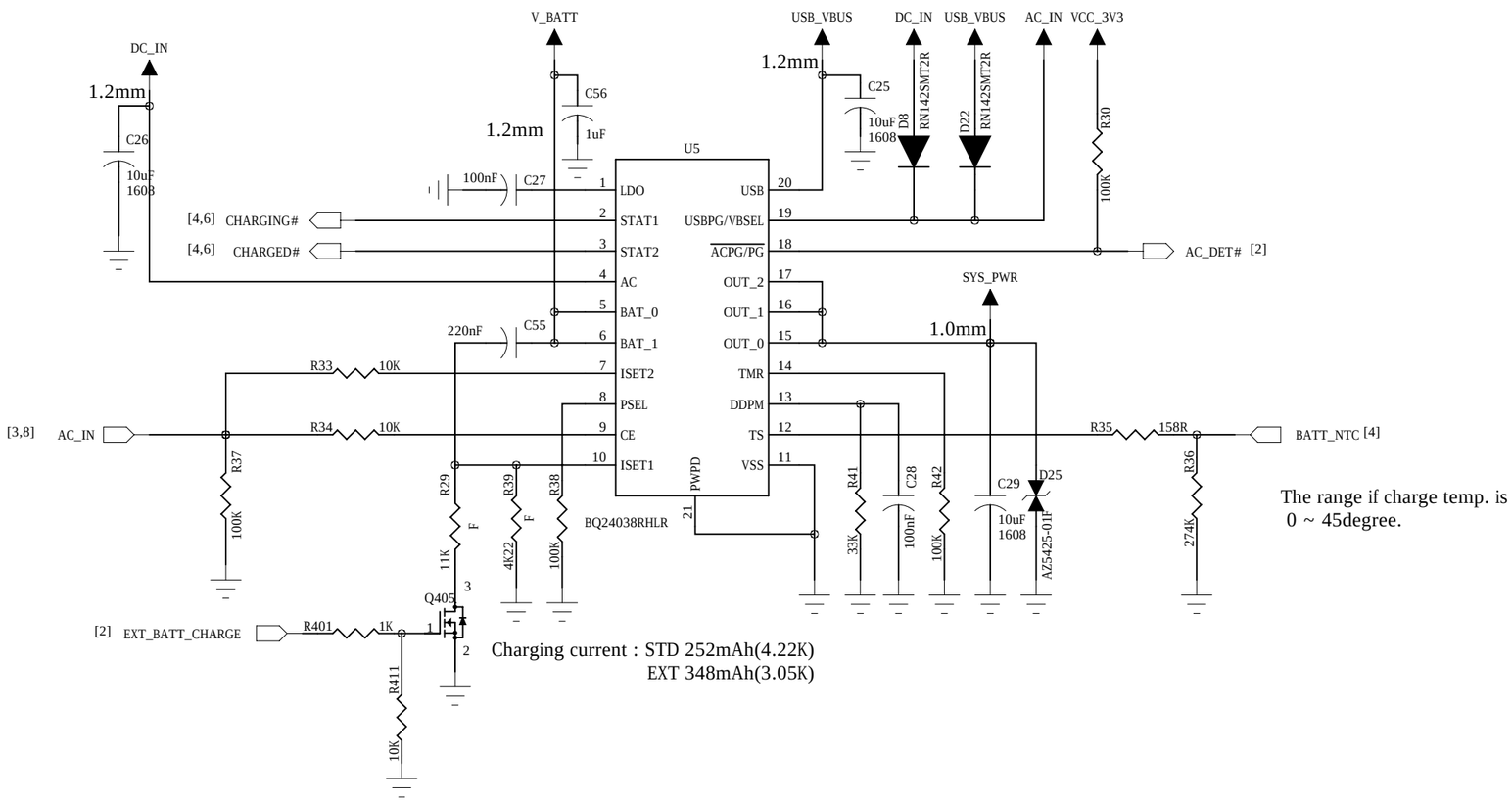Charge Block