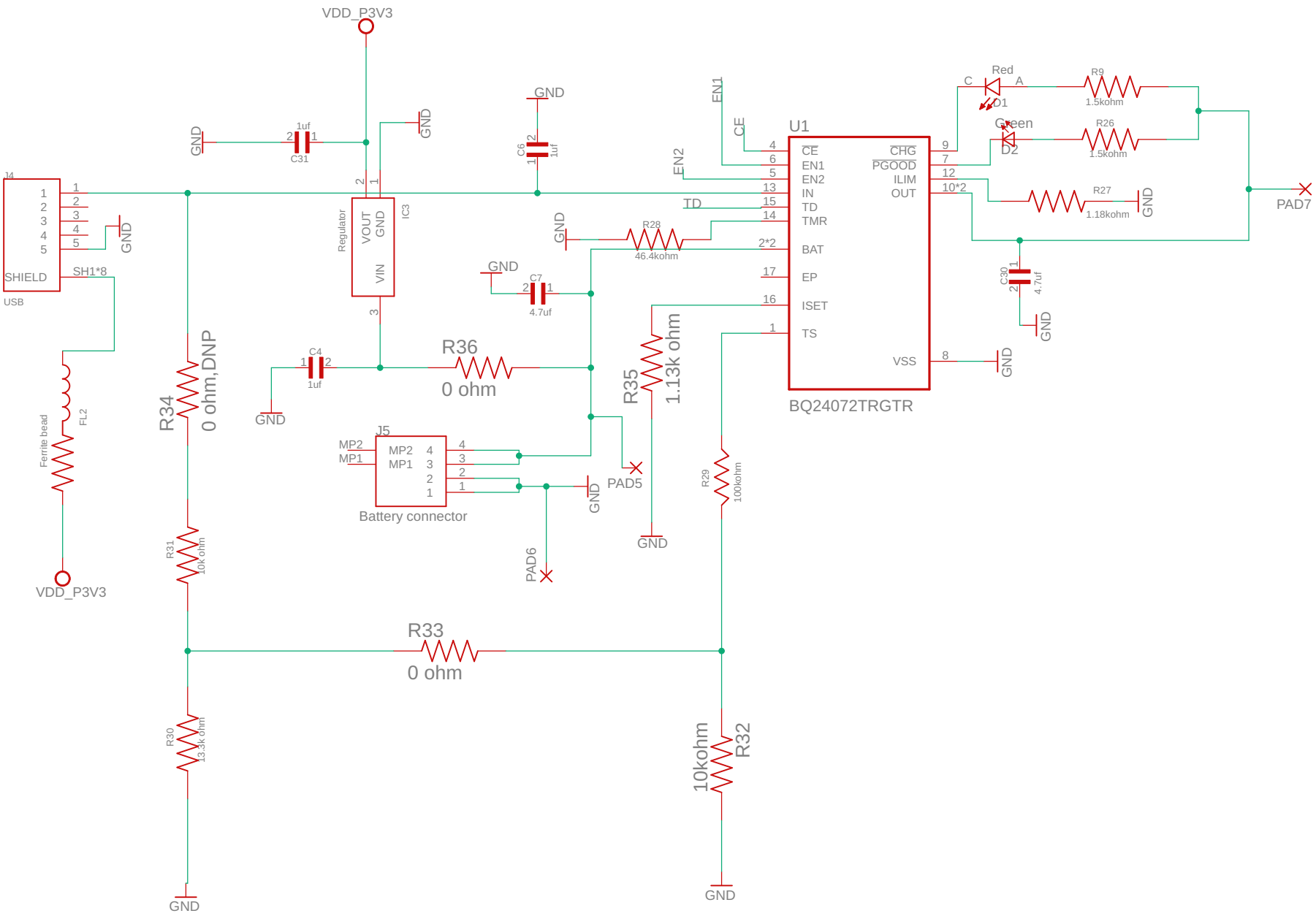
VDD_P3V3
GND
1uf
C31
C6
1uf
J4
SHIELD
SH1*8
USB
Regulator
VOUT
GND
VIN
IC3
EN1
CE
EN2
TD
U1
CE
EN1
EN2
IN
TD
TMR
BAT
EP
ISET
TS
CHG
PGOOD
ILIM
OUT
VSS
BQ24072TRGTR
Red
D1
Green
D2
R9
1.5kohm
R26
1.5kohm
R27
1.18kohm
PAD7
R28
46.4kohm
C7
4.7uf
C30
4.7uf
C4
1uf
R36
0 ohm
R35
1.13k ohm
R34
0 ohm,DNP
Ferrite bead
FL2
J5
MP2
MP1
Battery connector
PAD5
PAD6
R29
100kohm
R31
10k ohm
R33
0 ohm
R30
13.3k ohm
10kohm
R32