DC INPUT : MAIN POWER INPUT

Input Power : 5V / 2A
Expected Load Current : 1A
Battery : 18650 / 1S1P / 3000mA

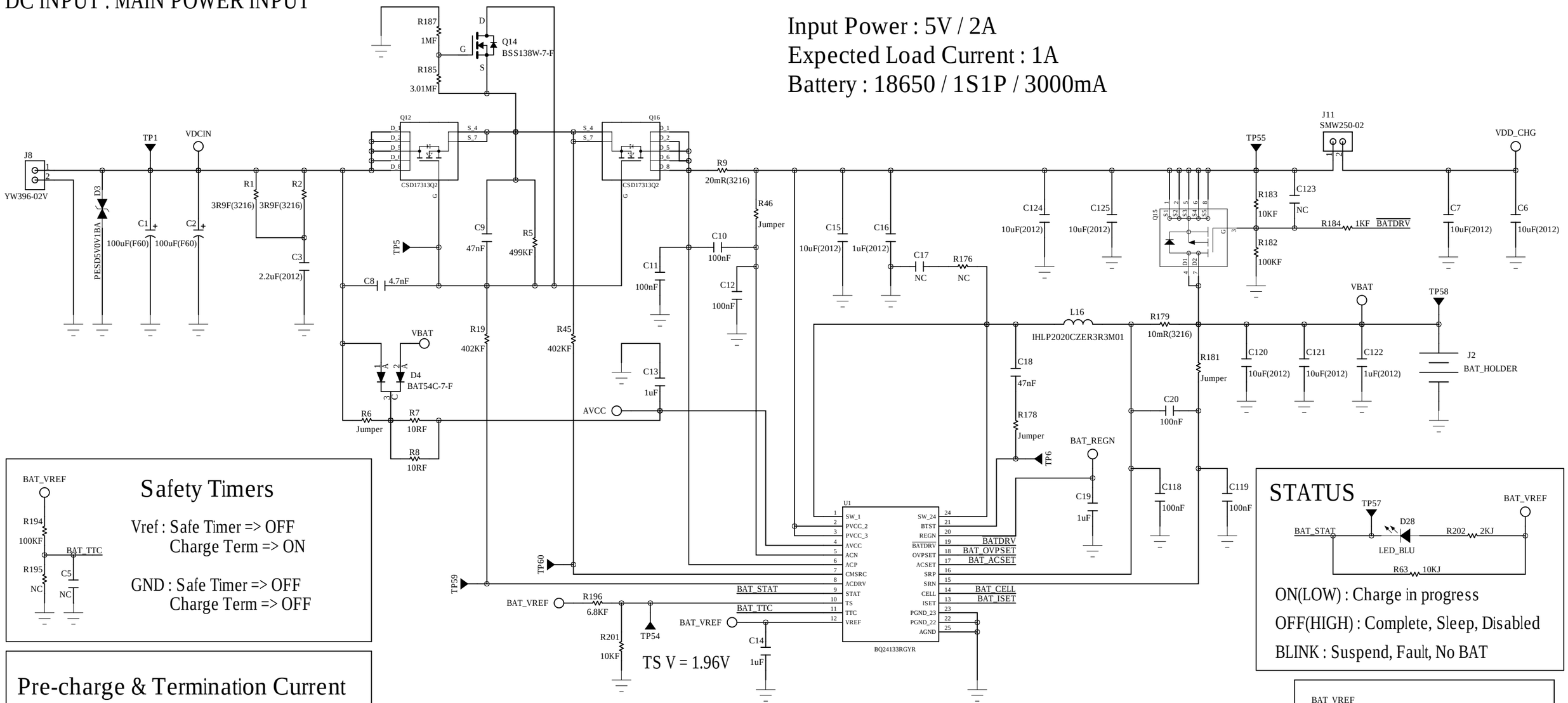

Safety Timers

Vref : Safe Timer => OFF
Charge Term => ON

GND : Safe Timer => OFF
Charge Term => OFF

STATUS

ON(LOW) : Charge in progress
OFF(HIGH) : Complete, Sleep, Disabled
BLINK : Suspend, Fault, No BAT

Pre-charge & Termination Current

Ipre-charge = Iterm = Icharge / 10

Ipre-charge = Iterm = 1 / 10 = 0.1

CELL SELECTION

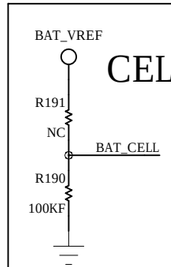

VREF : 3CELL
FLOAT : 2CELL
GND : 1CELL

Fast Charge Current

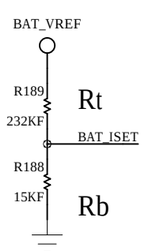

Icharge = Viset / (20 X Rsr)

1A = 0.2 / (20 X 0.01)

Rb = Rt / ((Vref / Viset) - 1)

15 = 232 / ((3.3 / 0.2) - 1)

Input Current Regulation

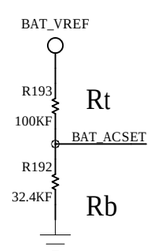

Idpm = Vacset / (20 X Rac)

2A = 0.8 / (20 X 0.02)

Rb = Rt / ((Vref / Vacset) - 1)

32 = 100 / ((3.3 / 0.8) - 1)

Input OVP(ACOV)

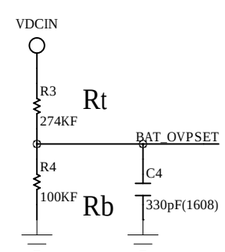

OVP : 6V

V_ACOV : 1.6V (Fixed Value)

Rb = V_ACOV X Rt / (OVP - V_ACOV)

99.64 = 1.6 X 274 / (6 - 1.6)

Title: SERVONE-DIO		
Size: B	Document Number: ID2409-2D13-01	Rev: 0.2.0
Date: 2025-01-21	Sheet 8 of 1	