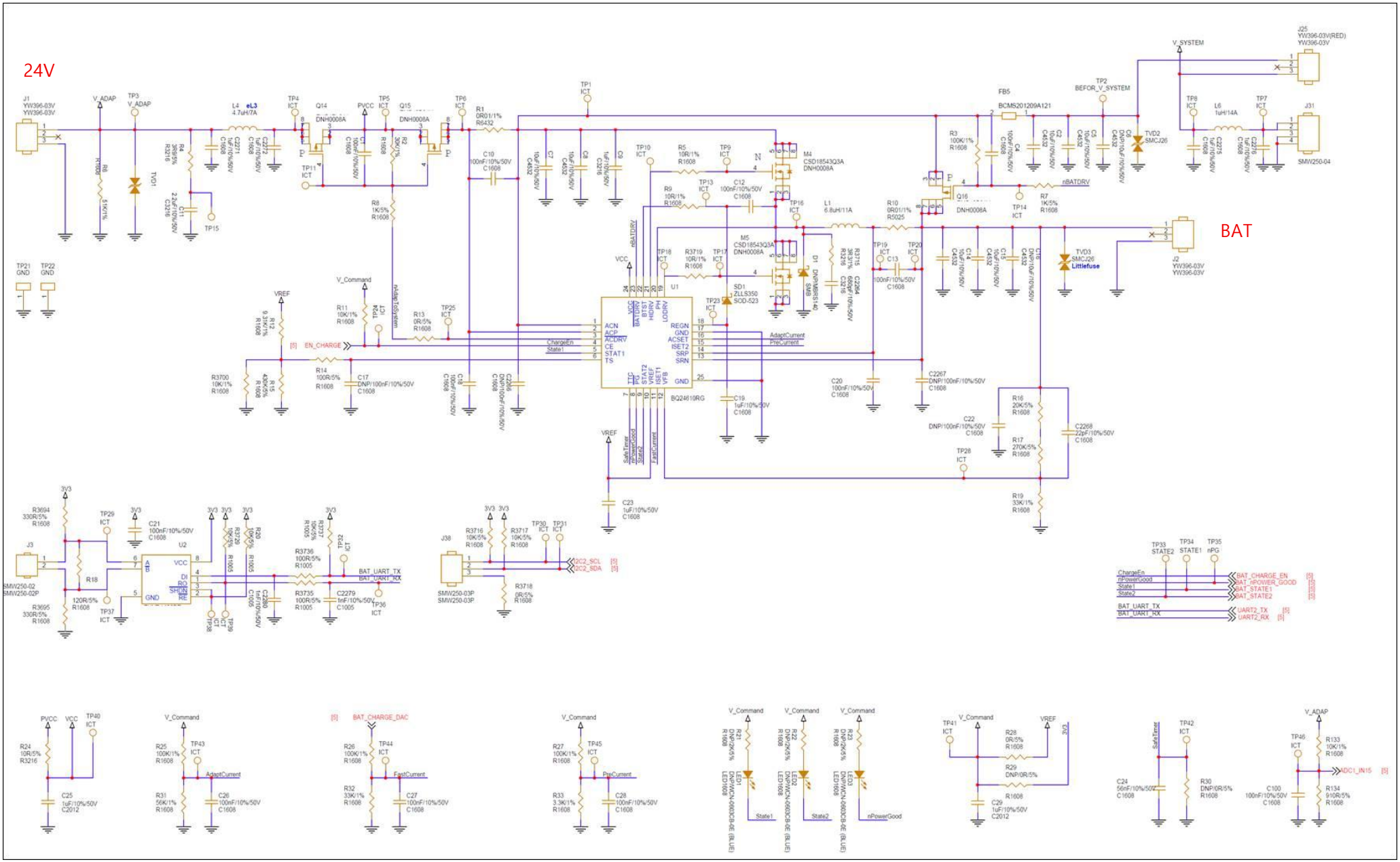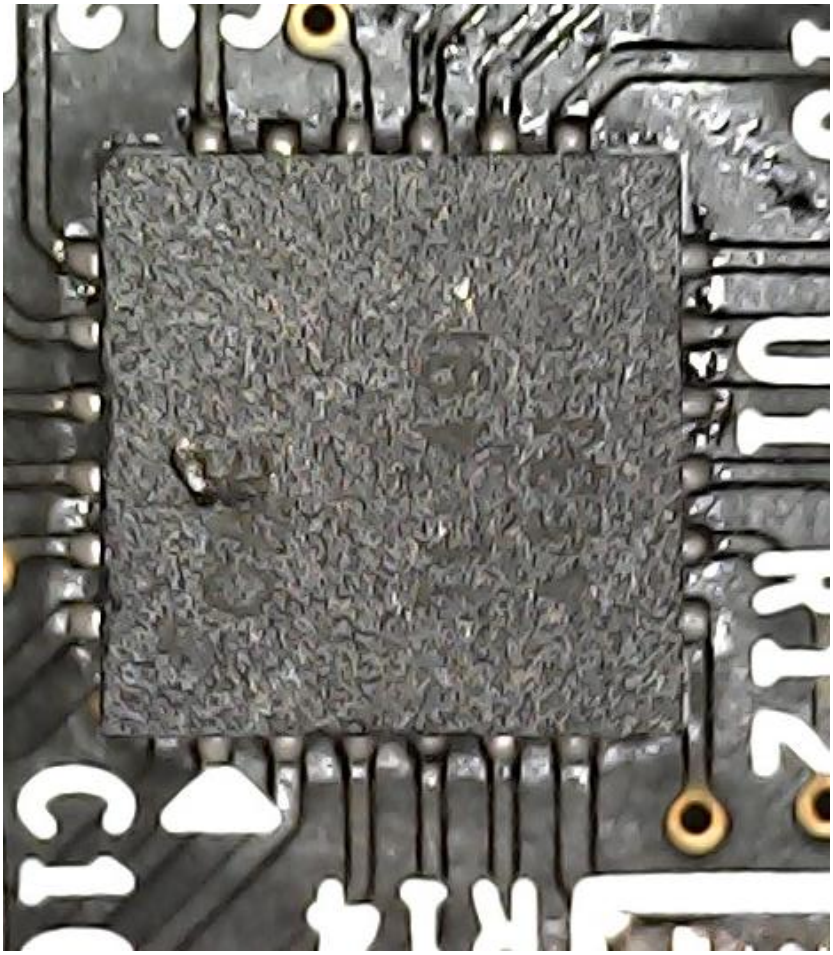
24V
BAT
BQ24610RG
U1
U2
J1
J2
J3
J25
J31
J38
V_ADAP
V_SYSTEM
BEFOR_V_SYSTEM
EN_CHARGE
ChargeEn
State1
State2
nPowerGood
AdaptCurrent
PreCurrent
FastCurrent
BAT_UART_TX
BAT_UART_RX
I2C2_SCL
I2C2_SDA
BAT_CHARGE_EN
BAT_nPOWER_GOOD
BAT_STATE1
BAT_STATE2
UART2_TX
UART2_RX
BAT_CHARGE_DAC
ADC1_IN15
nBATDRV
V_Command
VREF
3V3
PVCC
VCC