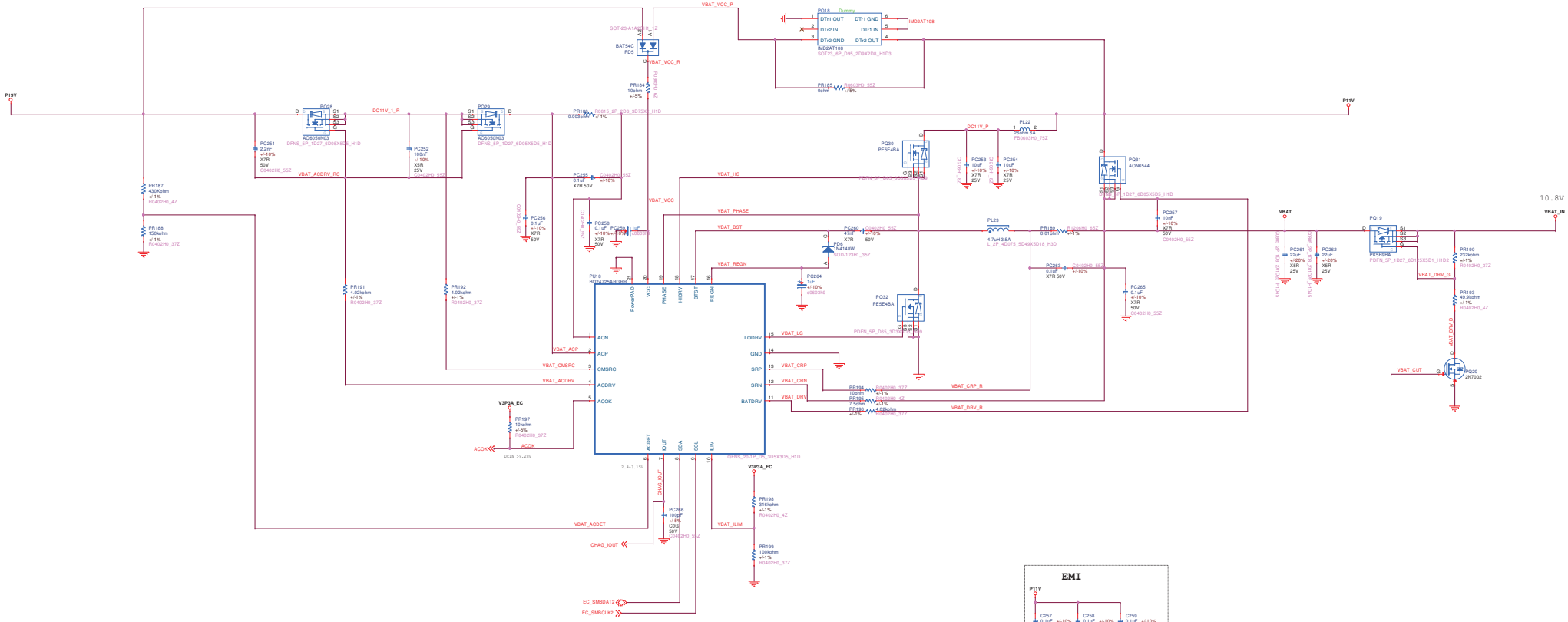

SW1 / VBAT	SW
ON	1-2
OFF	2-3

Should check PACK circuit,can remove this circuit if PACK not pull-high and PACK not master.

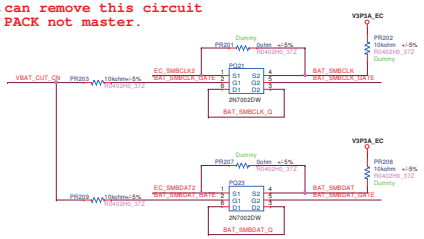

UPS(2900mA,7.4V)

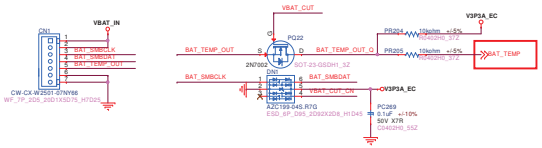

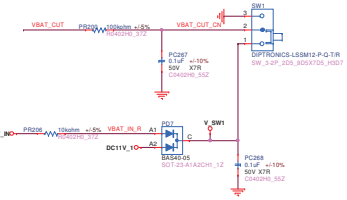

FOXCONN® Foxconn Technology Group Ennoconn Corporation	Ennoconn Corporation Hardware R&D Dept.	
Title	Charger	
Size D	Document Number IPS_70CB	Rev 0.2
Date: Friday, January 18, 2019	Sheet 46 of 49	