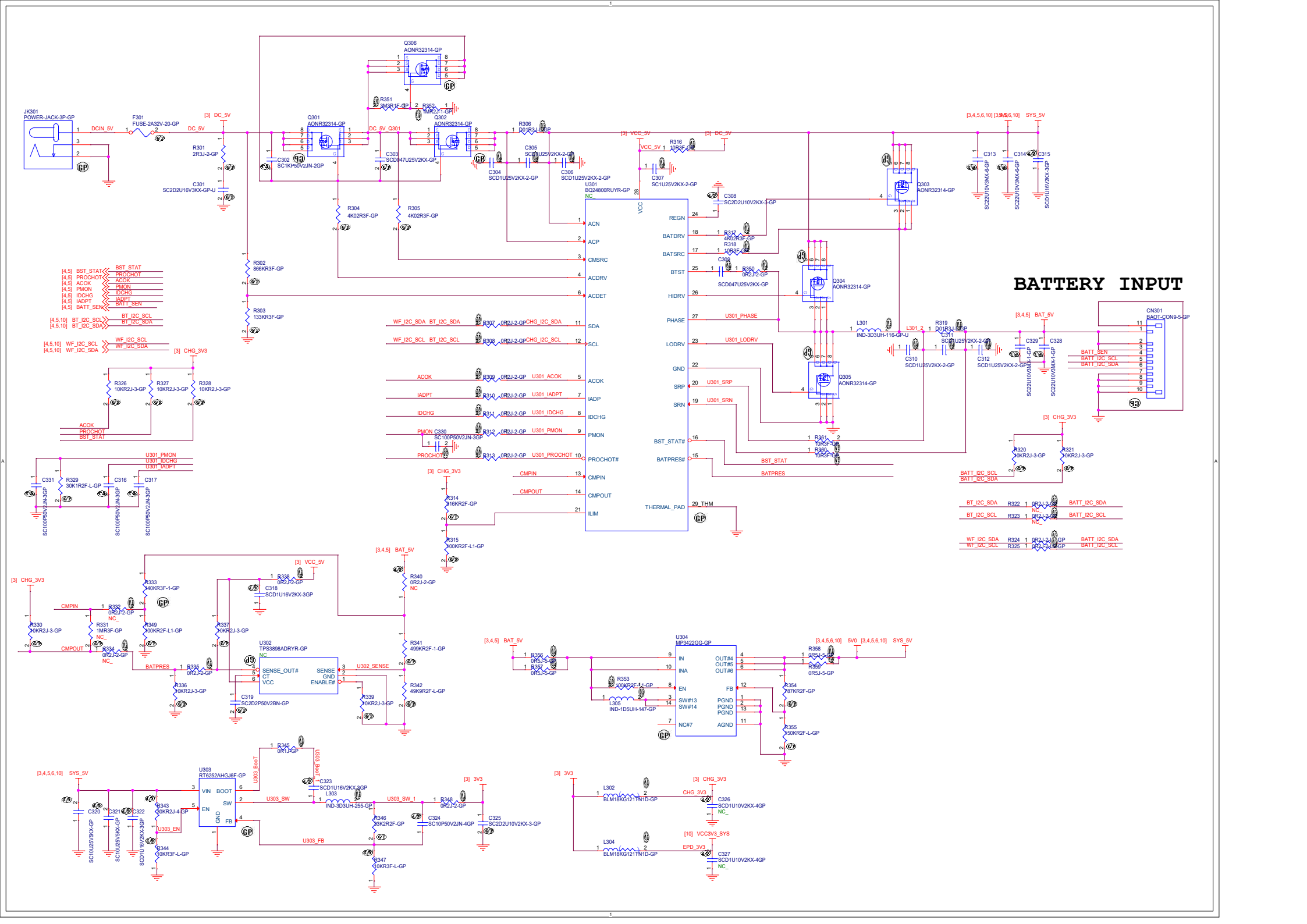BATTERY INPUT