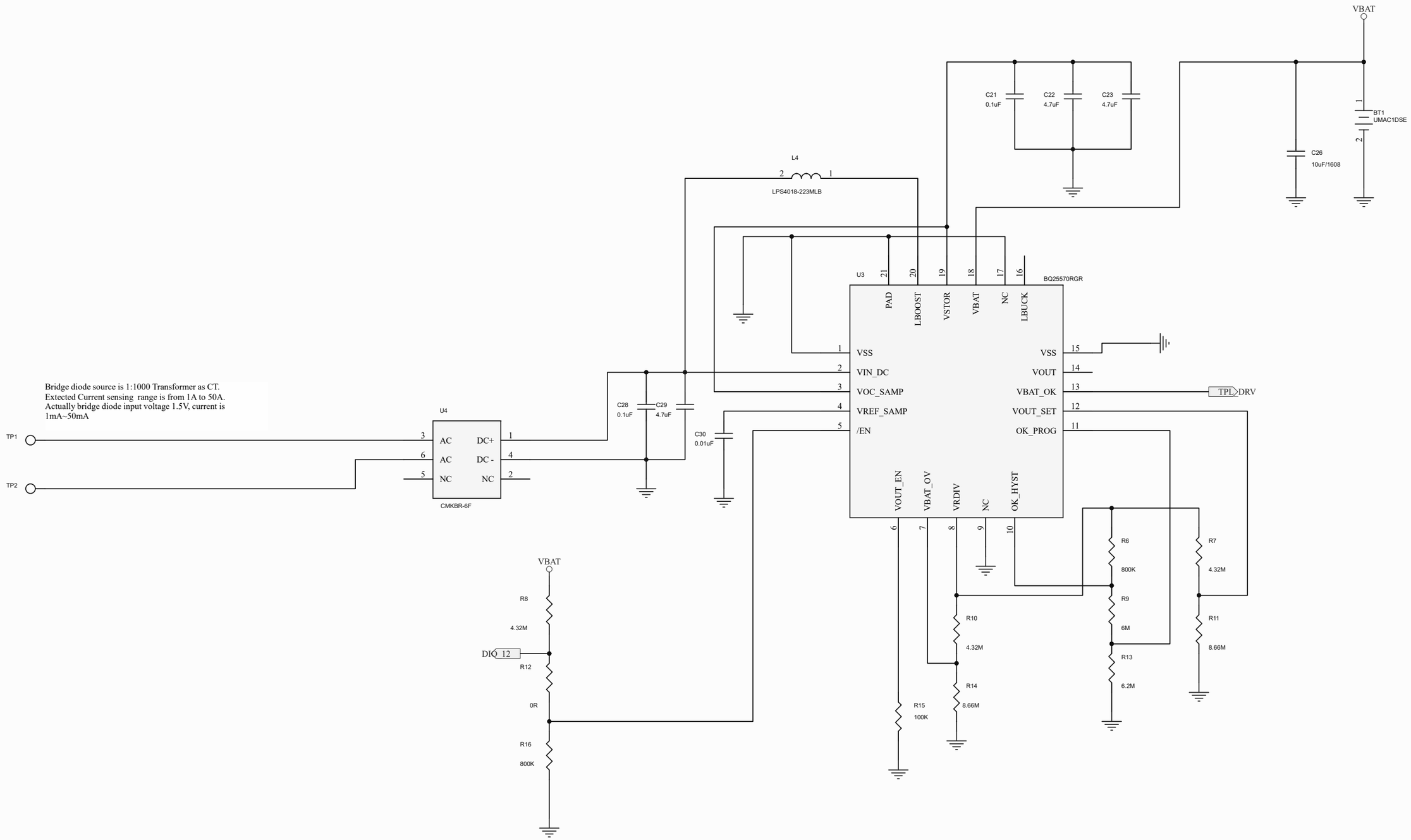

Title		
Size A	Document Number	Rev
Date:	Sheet 6 3 of 6	