Vcharge

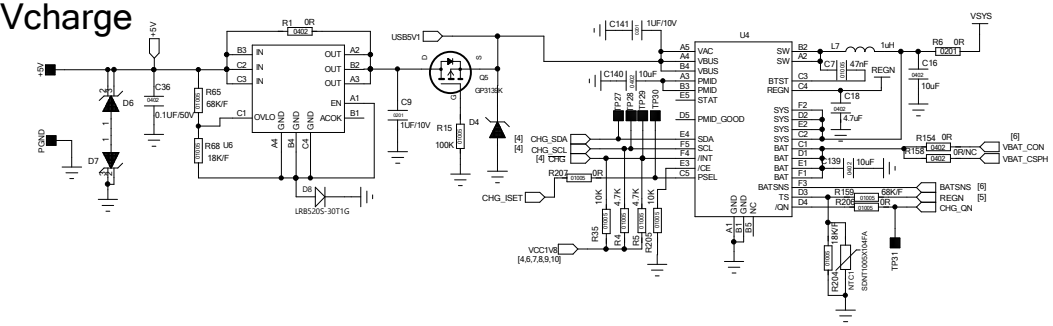
+5V
R1 0R
0402
USB5V1
C141 1UF/10V
U4
VSYS
R6 0R
0201
C16
10uF
L7
1uH
C7 47nF
REGN
C18
47uF
C36
0.1UF/50V
R65
68K/F
R68
18K/F
U6
OVLO
IN
OUT
EN
ACOK
GND
C9
1UF/10V
Q5
GP3135K
R15
100K
D4
D6
D7
D8
LR8520S-30T1G
C140 10uF
TP27
TP28
TP29
TP30
VAC
VBUS
PMID
STAT
PMID_GOOD
SDA
SCL
/INT
/CE
PSEL
SW
BTST
SYS
BAT
BATSNS
TS
/QN
GND
NC
CHG_SDA
CHG_SCL
CHG_ISET
R20 0R
0201
10K
4.7K
R35
R34
R5
R20
VCC1V8
[4,6,7,8,9,10]
C139 10uF
R154 0R
R158 0R/NC
[6]
VBAT_CON
VBAT_CSPH
R159 68K/F
R206 0R
BATSNS [6]
REGN [5]
CHG_QN
R203 18K/F
NTC
SDNT1005X104FA
TP31
P-GND