@0429 ADD Charger IC

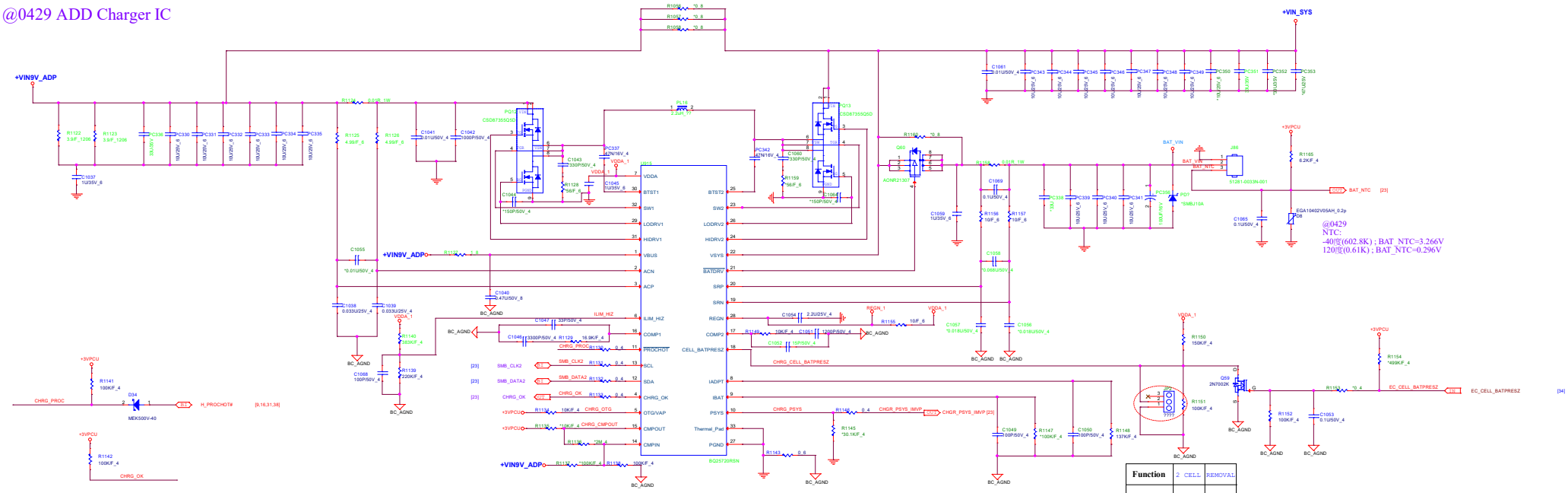

Function	2 CELL	REMOVAL
BAT DEFINE	JP4 2-3 SHORT DEFAULT	JP4 1-2 SHORT

@0506 MODIFY
DEFAULT BAT_CELL SETTING FROM HW JUMPER

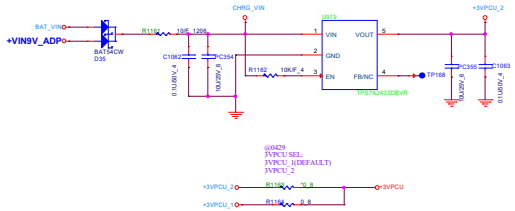

@20240422
1.ADD POWER DETECT IC
2.VMON:(1+RA/RB) * VIT-
3.VMON INITIAL SETTING:6.45V +-2.7%

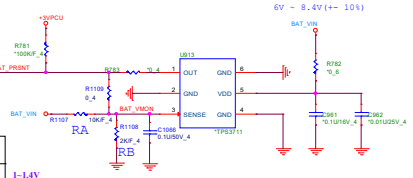

Function	RA	RB
ADC	10K	2K
Voltage Detect	590K	39K

1~1.4V

EBN Technology Corp.

Project Name	MA3C
Size: Custom	Document Number: BLANK
Rev	A
Date: Wednesday, May 08, 2024	Sheet 39 of 40