BQ Symbol

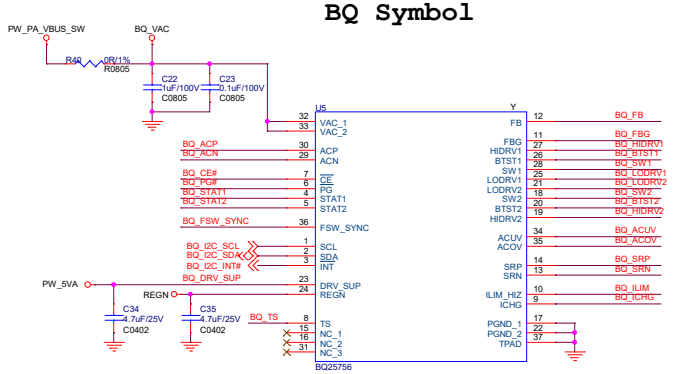

Power IC Need To Work In Reserve Mode

HW Config

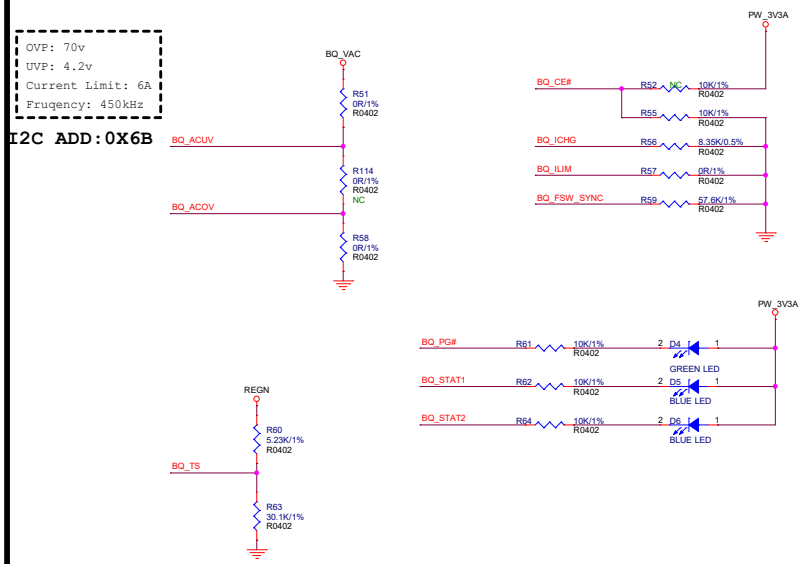

Input Stage

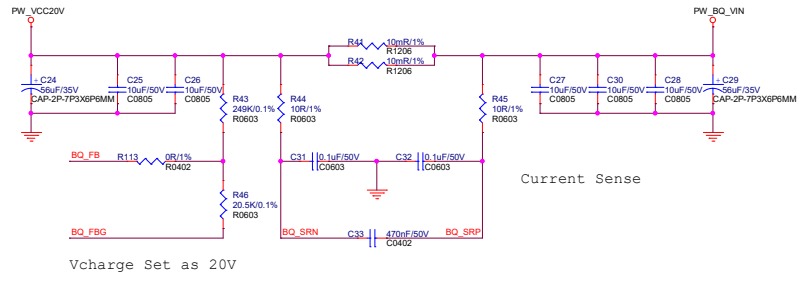

Switching Stage

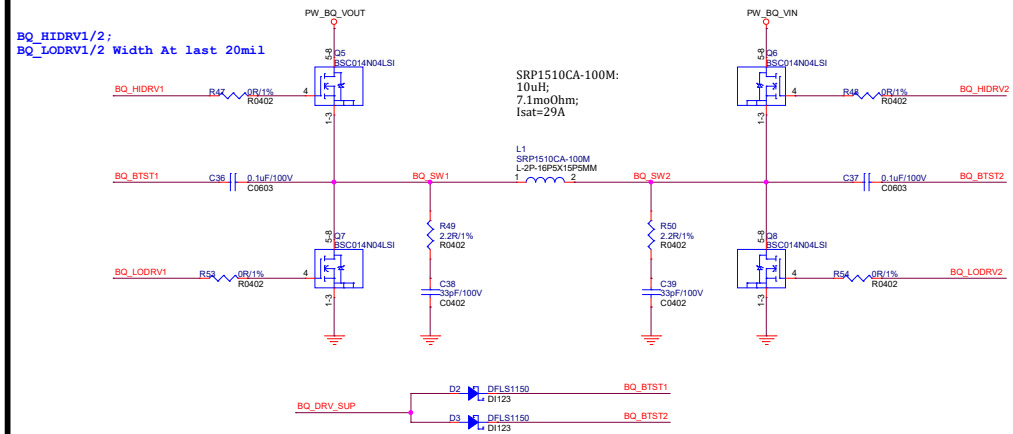

Output Stage

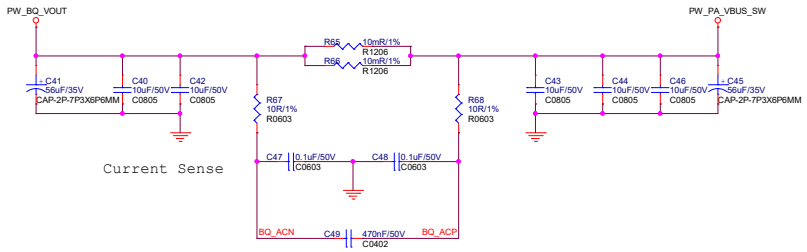

008-TBT03PDA		
Size A2	Document Number <Doc>	Rev 01
Date: Monday, December 25, 2023	Sheet 3 of 5	