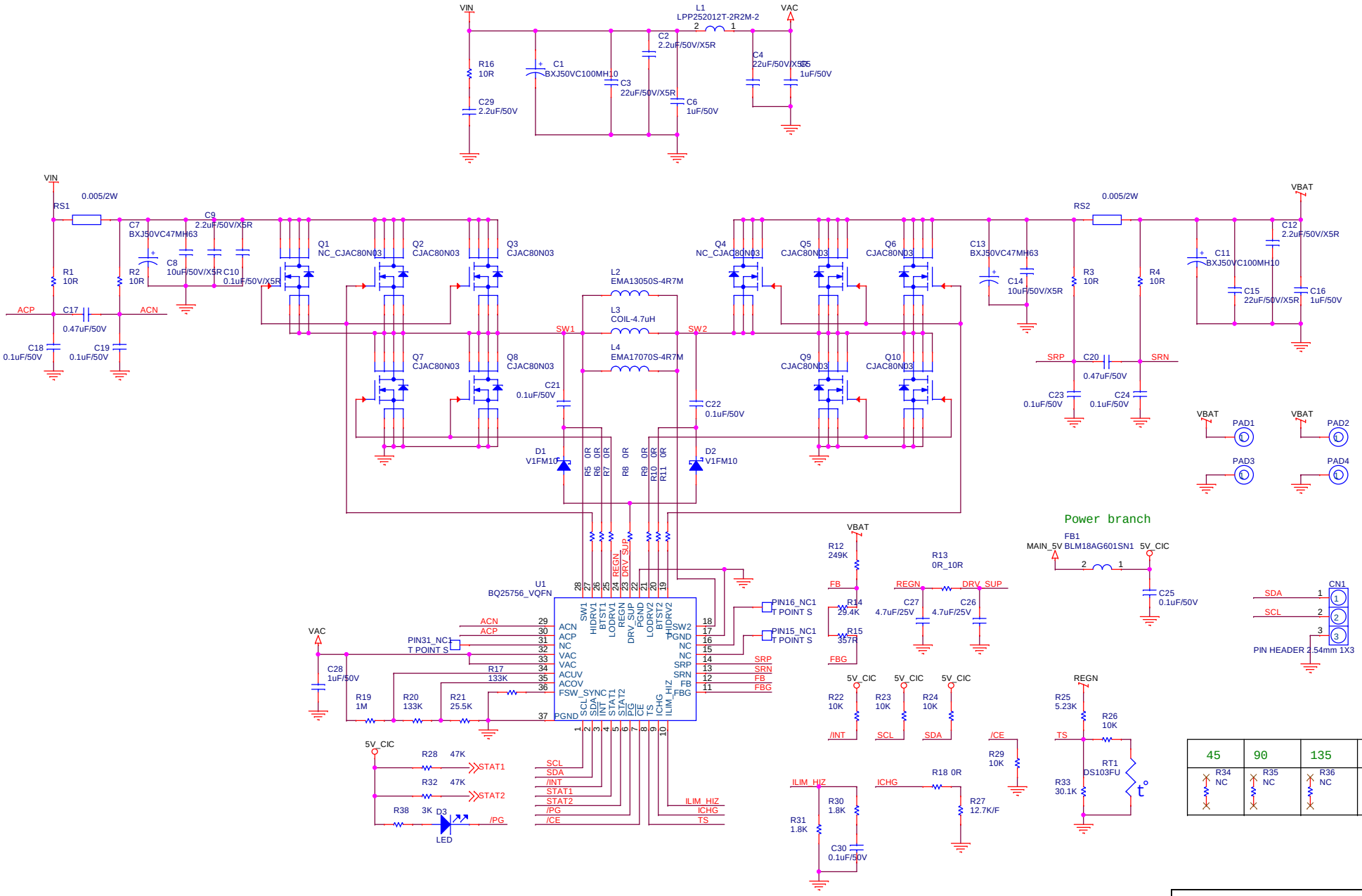
VIN
L1
LPP252012T-2R2M-2
VAC
R16
10R
C1
BXJ50VC100MH10
C2
2.2uF/50V/X5R
C3
22uF/50V/X5R
C4
22uF/50V/X5R
C5
1uF/50V
C6
1uF/50V
C29
2.2uF/50V
RS1
0.005/2W
C7
BXJ50VC47MH63
C8
10uF/50V/X5R
C9
2.2uF/50V/X5R
C10
0.1uF/50V/X5R
R1
10R
R2
10R
ACP
ACN
C17
0.47uF/50V
C18
0.1uF/50V
C19
0.1uF/50V
Q1
NC_CJAC80N03
Q2
CJAC80N03
Q3
CJAC80N03
Q4
NC_CJAC80N03
Q5
CJAC80N03
Q6
CJAC80N03
Q7
CJAC80N03
Q8
CJAC80N03
Q9
CJAC80N03
Q10
CJAC80N03
L2
EMA13050S-4R7M
L3
COIL-4.7uH
L4
EMA17070S-4R7M
SW1
SW2
C21
0.1uF/50V
C22
0.1uF/50V
D1
V1FM10
D2
V1FM10
R5 0R
R6 0R
R7 0R
R8 0R
R9 0R
R10 0R
R11 0R
C13
BXJ50VC47MH63
C14
10uF/50V/X5R
RS2
0.005/2W
R3
10R
R4
10R
SRP
SRN
C20
0.47uF/50V
C23
0.1uF/50V
C24
0.1uF/50V
VBAT
C11
BXJ50VC100MH10
C12
2.2uF/50V/X5R
C15
22uF/50V/X5R
C16
1uF/50V
PAD1
PAD2
PAD3
PAD4
Power branch
FB1
MAIN_5V
BLM18AG601SN1
5V_CIC
C25
0.1uF/50V
CN1
SDA
SCL
PIN HEADER 2.54mm 1X3
U1
BQ25756_VQFN
ACN
ACP
NC
VAC
VAC
ACUV
ACOV
FSW_SYNC
PGND
SW1
HIDRV1
BTST1
LODRV1
REGN
DRV_SUP
PGND
LODRV2
BTST2
HIDRV2
SW2
PGND
NC
NC
SRP
SRN
FB
FBG
SCL
SDA
/INT
STAT1
STAT2
/PG
/CE
ILIM_HIZ
ICHG
TS
PIN16_NC1
T POINT S
PIN15_NC1
T POINT S
PIN31_NC1
T POINT S
C28
1uF/50V
R17
133K
R19
1M
R20
133K
R21
25.5K
R12
249K
R13
0R_10R
R14
29.4K
R15
357R
C27
4.7uF/25V
C26
4.7uF/25V
R22
10K
R23
10K
R24
10K
/INT
SCL
SDA
/CE
R29
10K
R25
5.23K
R26
10K
R33
30.1K
RT1
DS103FU
R28
47K
R32
47K
R38
3K
D3
LED
STAT1
STAT2
/PG
R30
1.8K
R31
1.8K
C30
0.1uF/50V
R18 0R
R27
12.7K/F
45
90
135
180
R34
NC
R35
NC
R36
NC
R37
0R