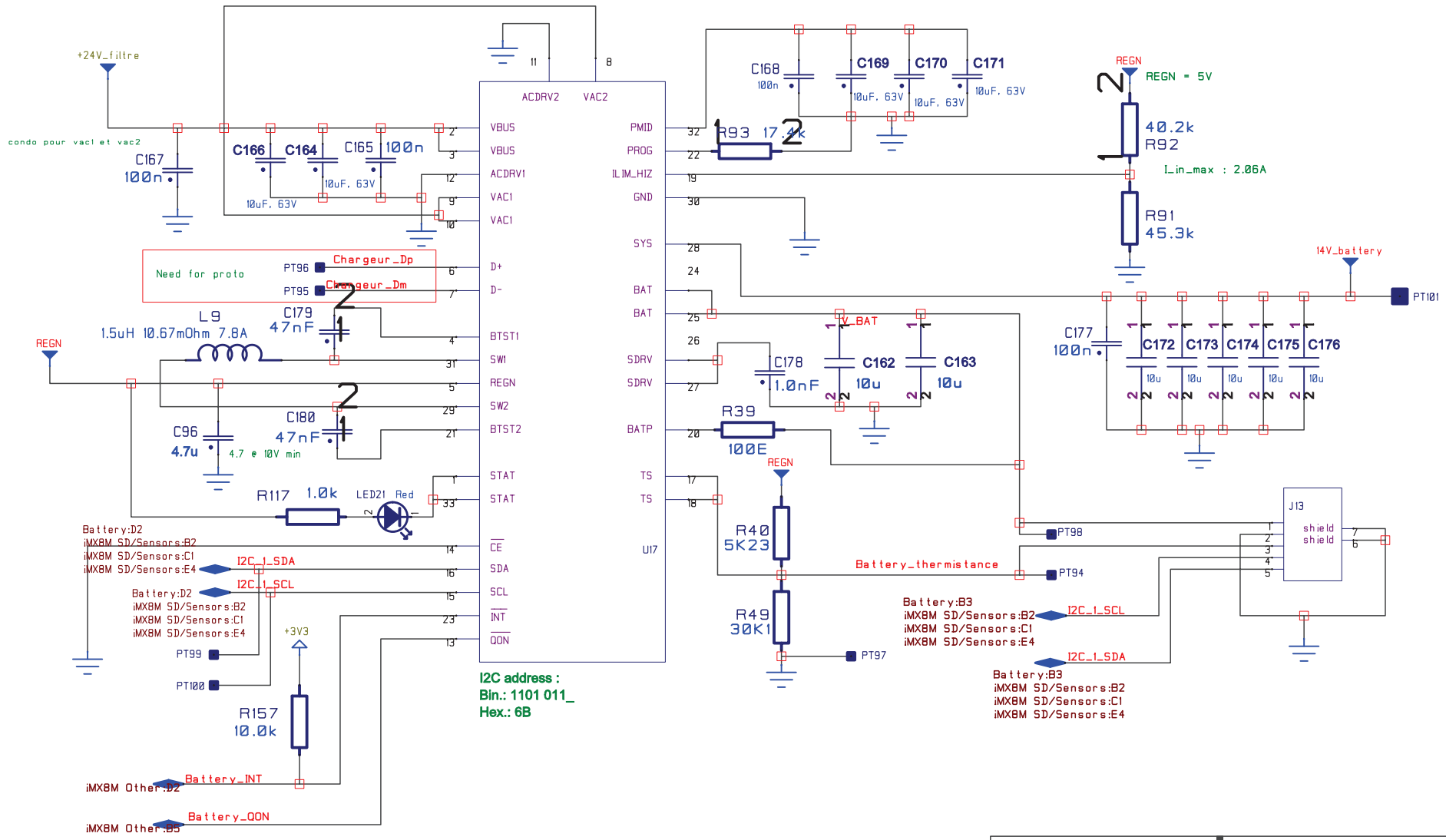

PRECIA MOLEN™ WORLDWIDE WEIGHING

Battery

Project informations		Design informations	
Ref.:	X-1901	Ref.:	4009556
Name:	I420	Name:	Terminal
Leader:	A. DEROUX	Leader:	A. RIVIERE
Rev.:	0	Date:	2020/07/09
		Page:	2 / 11