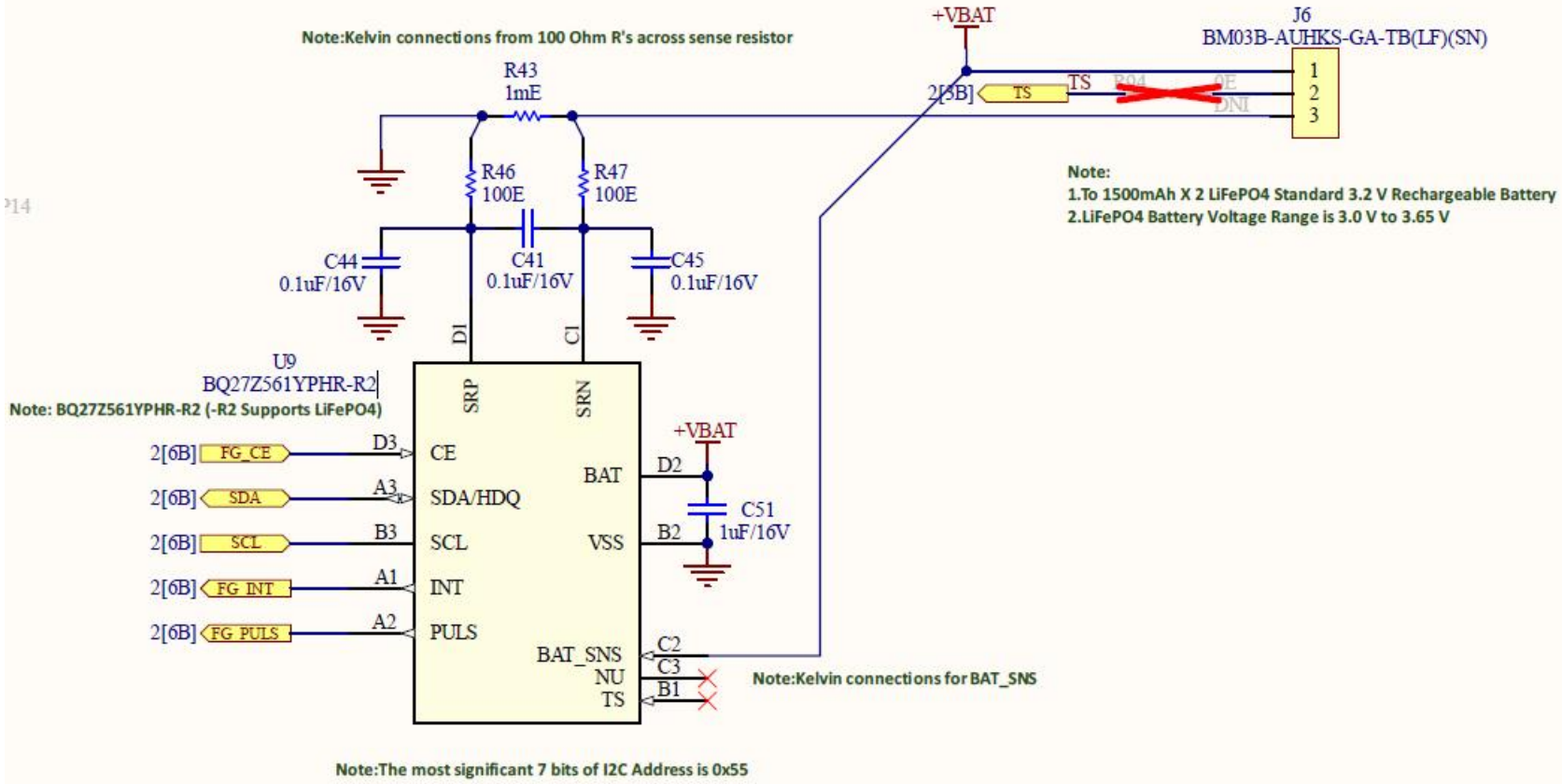Battery Gauge