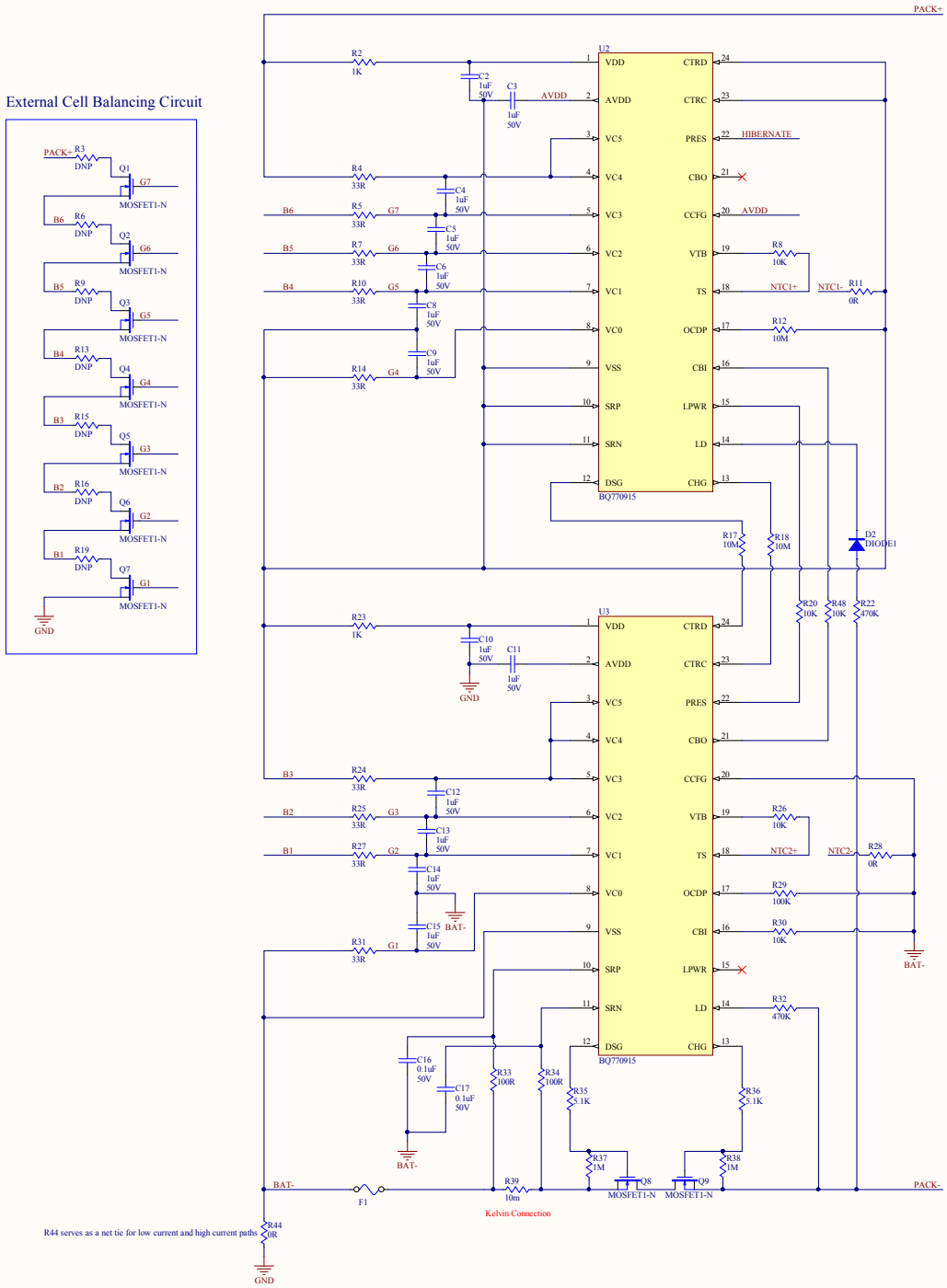

Title		
Size C	Number	Revision
Date: 8/14/2019	Sheet of	
File: S:\Product Files\..\SPS 2A29VDC BBFM 0x3eb.Dsn	Drawn By:	