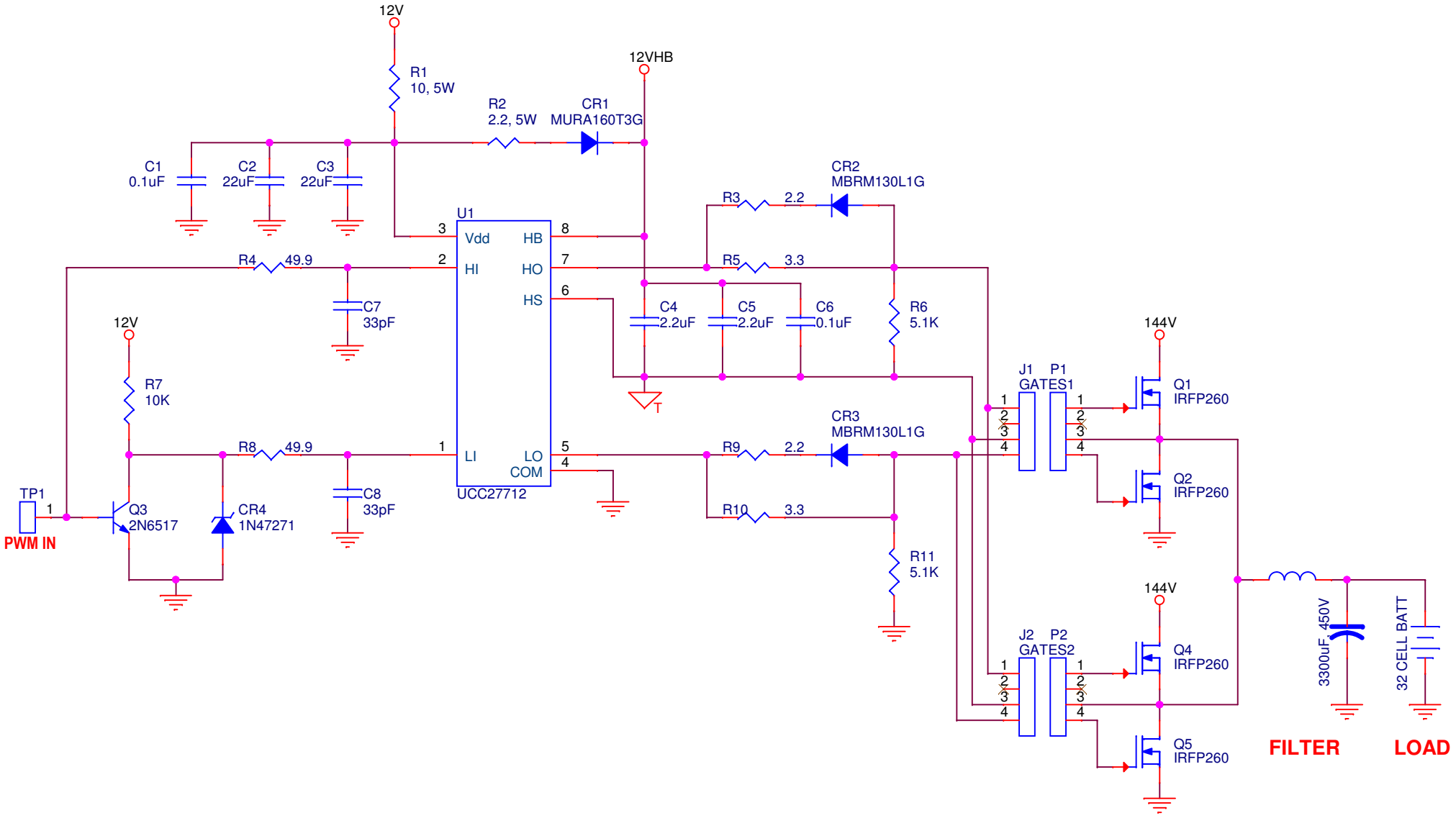

Title	HIGH-SIDE MOSFET GATE DRIVER USING NFET	
Size A	Document Number <Doc>	Rev P
Date: Friday, April 19, 2024	Sheet 1 of 11	