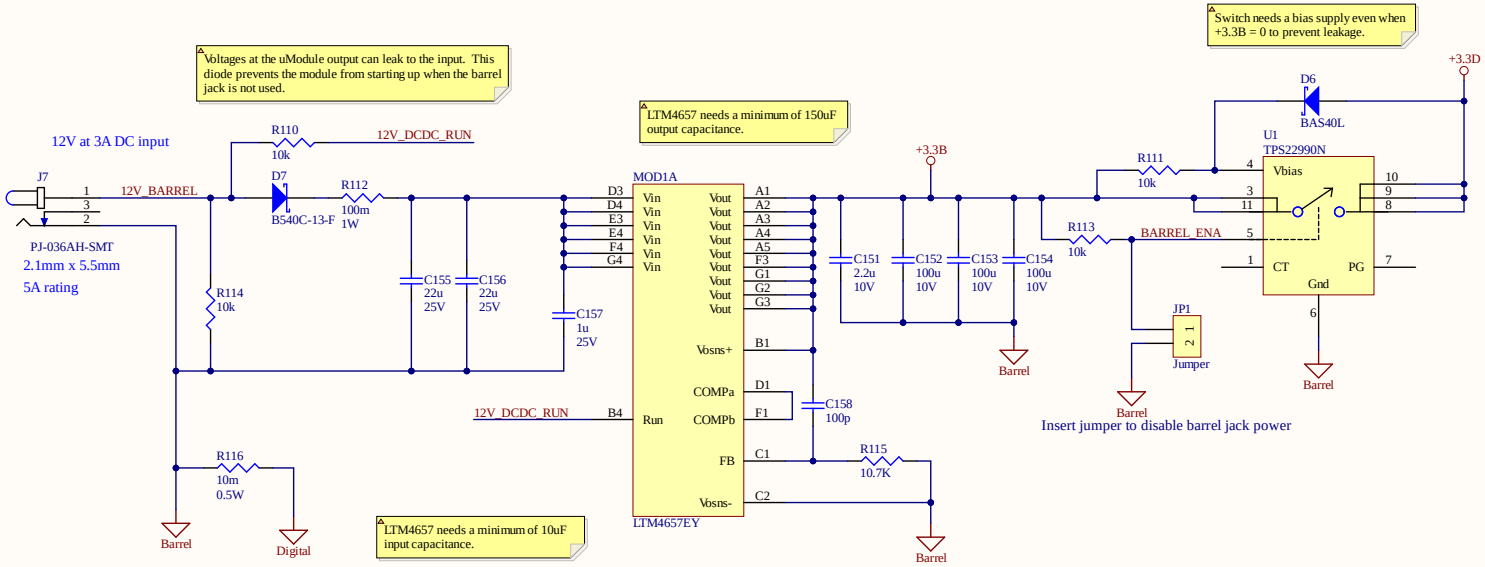

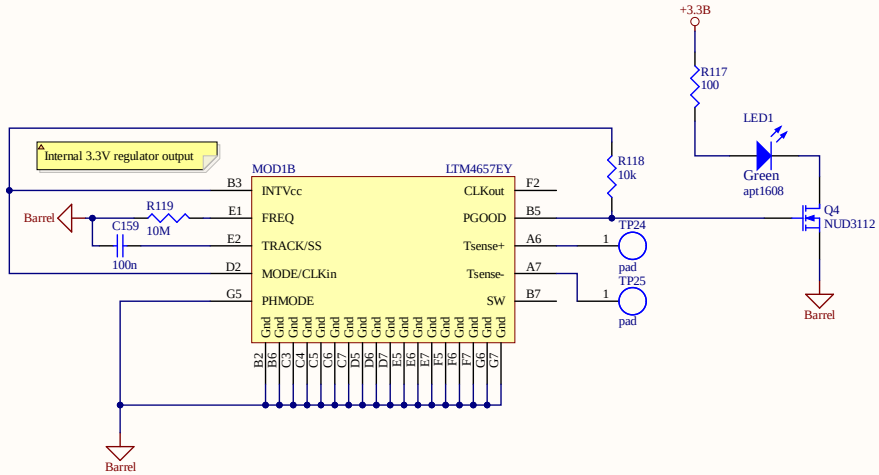

Title: *Ultra Logic Board*			Drawn by: John Peck
Size: B	Number: 6	Revision: A	Engineer: John Peck
Date: 7/31/2020	Time: 3:56:04 PM	Sheet 6 of 22	Approved by: *
File: Barrel_Power.SchDoc			

Picarro Inc.
3105 Patrick Henry Dr.
Santa Clara, CA.
95054