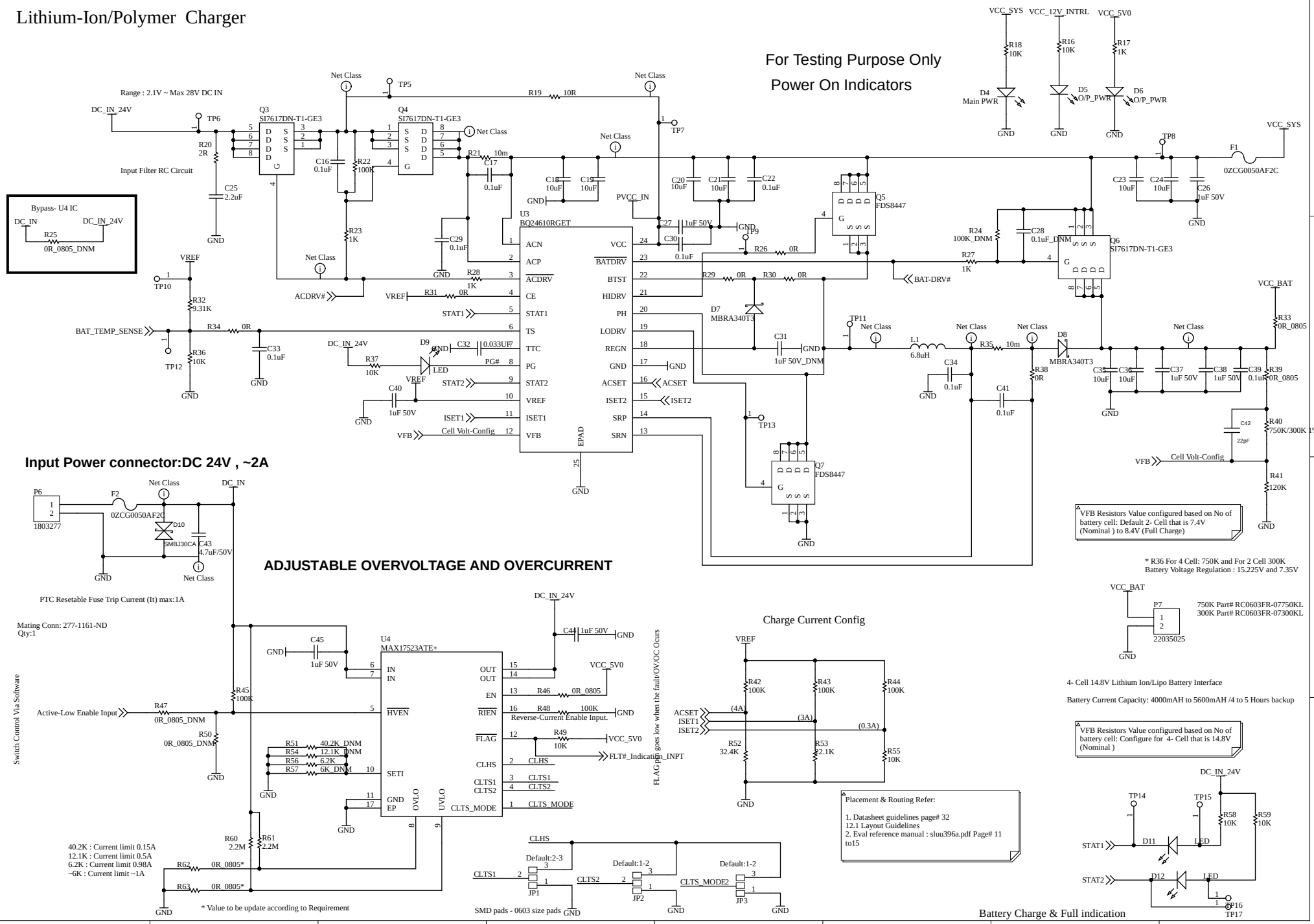# Lithium-Ion/Polymer Charger