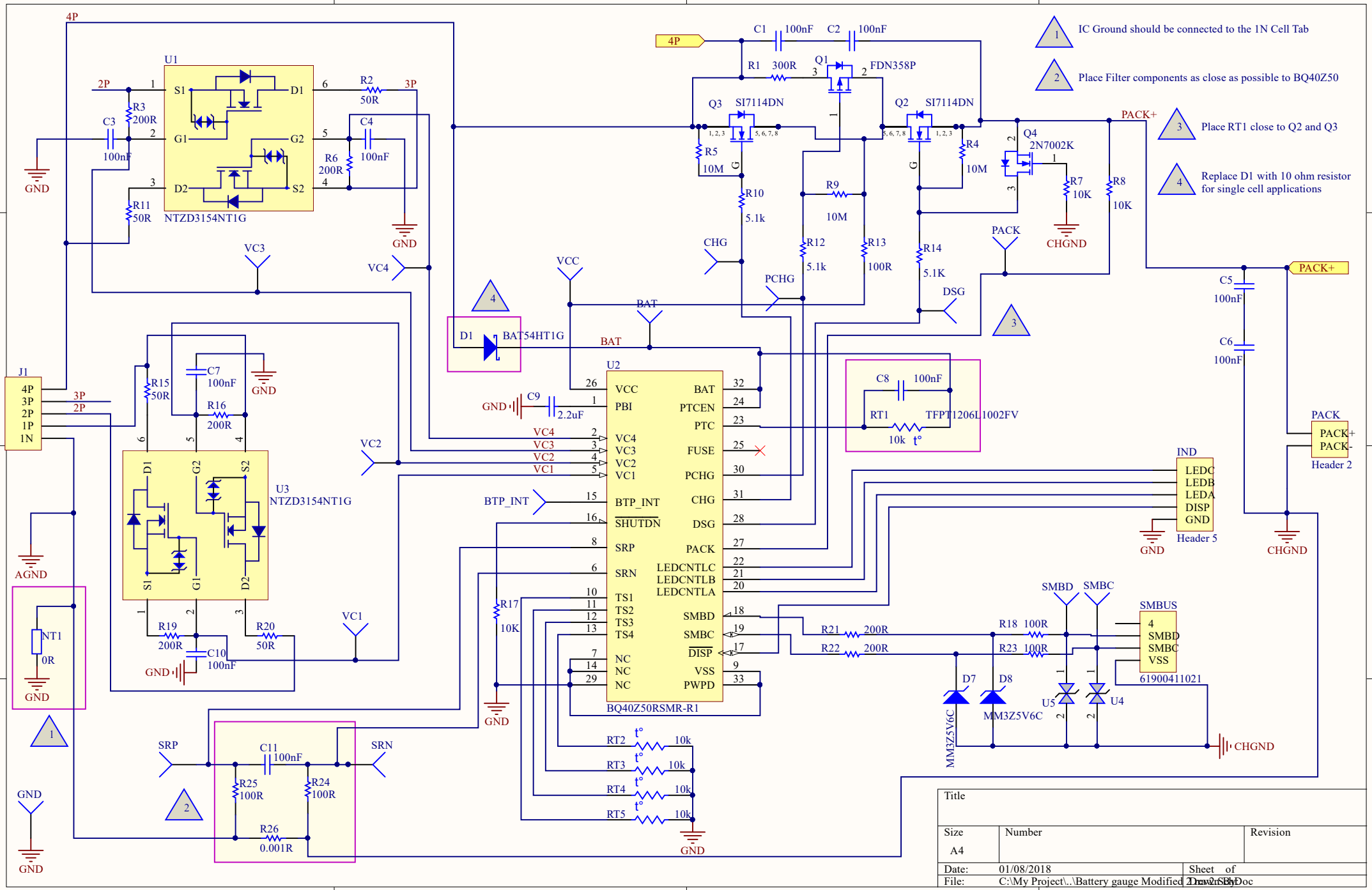
IC Ground should be connected to the 1N Cell Tab
Place Filter components as close as possible to BQ40Z50
Place RT1 close to Q2 and Q3
Replace D1 with 10 ohm resistor for single cell applications
U1
NTZD3154NT1G
U2
BQ40Z50RSMR-R1
U3
NTZD3154NT1G
Q1 FDN358P
Q2 SI7114DN
Q3 SI7114DN
Q4 2N7002K
D1 BAT54HT1G
RT1 TFPT1206L1002FV
J1
IND
Header 5
PACK
Header 2
SMBUS
61900411021
D7 MM3Z5V6C
D8 MM3Z5V6C
U4
U5
NT1 0R
4P
3P
2P
1P
1N
PACK+
PACK-
VC1
VC2
VC3
VC4
BAT
CHG
PCHG
DSG
PACK
VCC
BTP_INT
SRP
SRN
SMBD
SMBC
GND
AGND
CHGND
Title
Size A4
Number
Revision
Date: 01/08/2018
Sheet of
File: C:\My Project\..\Battery gauge Modified 2.PrjPcb
Drawn By: