Battery Protector and Fuel Gauge

Page	Index
1	COVE RPAGE
2	BATTERY PROTECTOR
3	FUEL GAUGE
4	MECH WIRE

Designator
Eva_BatteryProtector.SchDoc

Designator
Eva_FuelGauge.SchDoc

Designator
Eva_MechWire.SchDoc

BATTERY PROTECTION

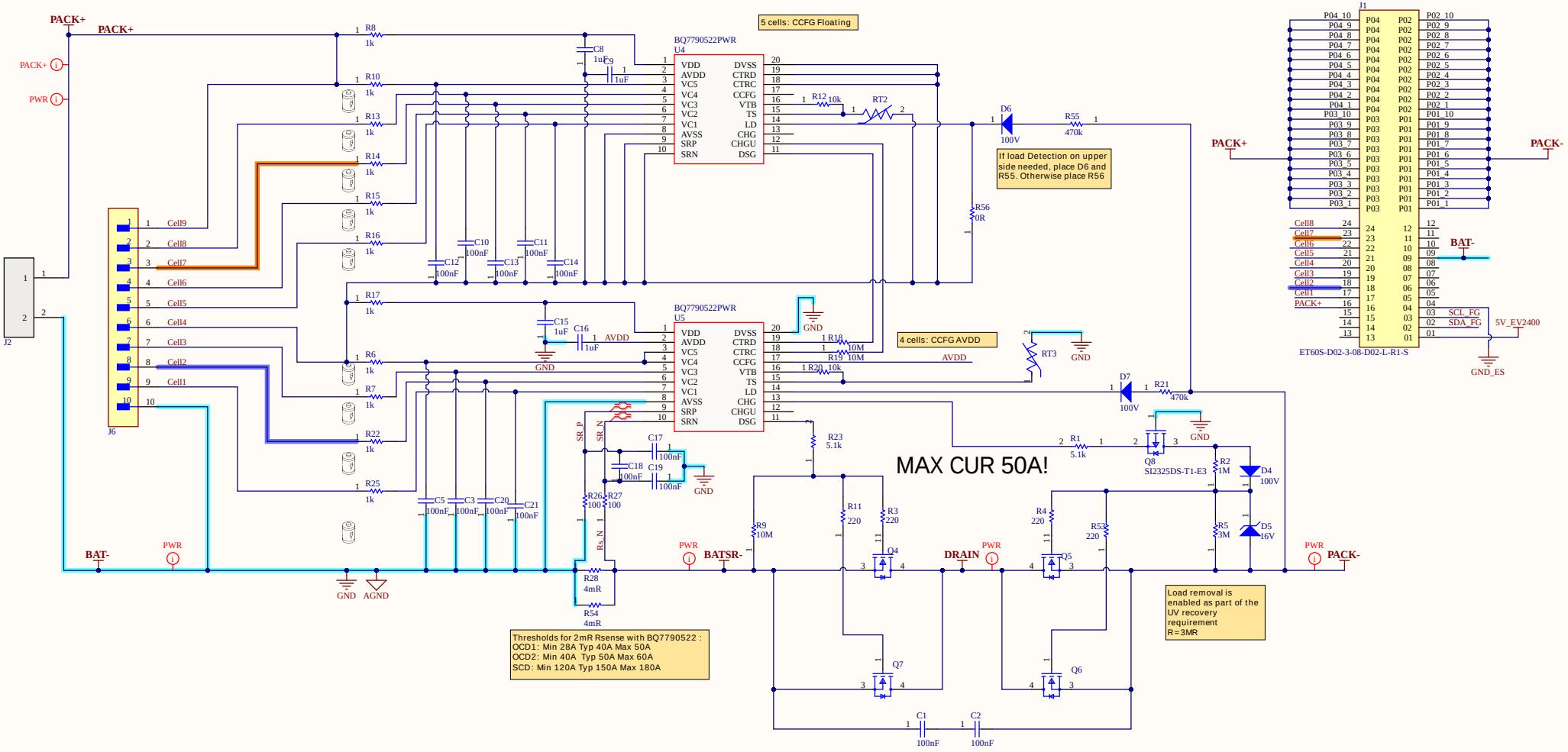

FUEL GAUGE

Impedance Track™
5-LED display

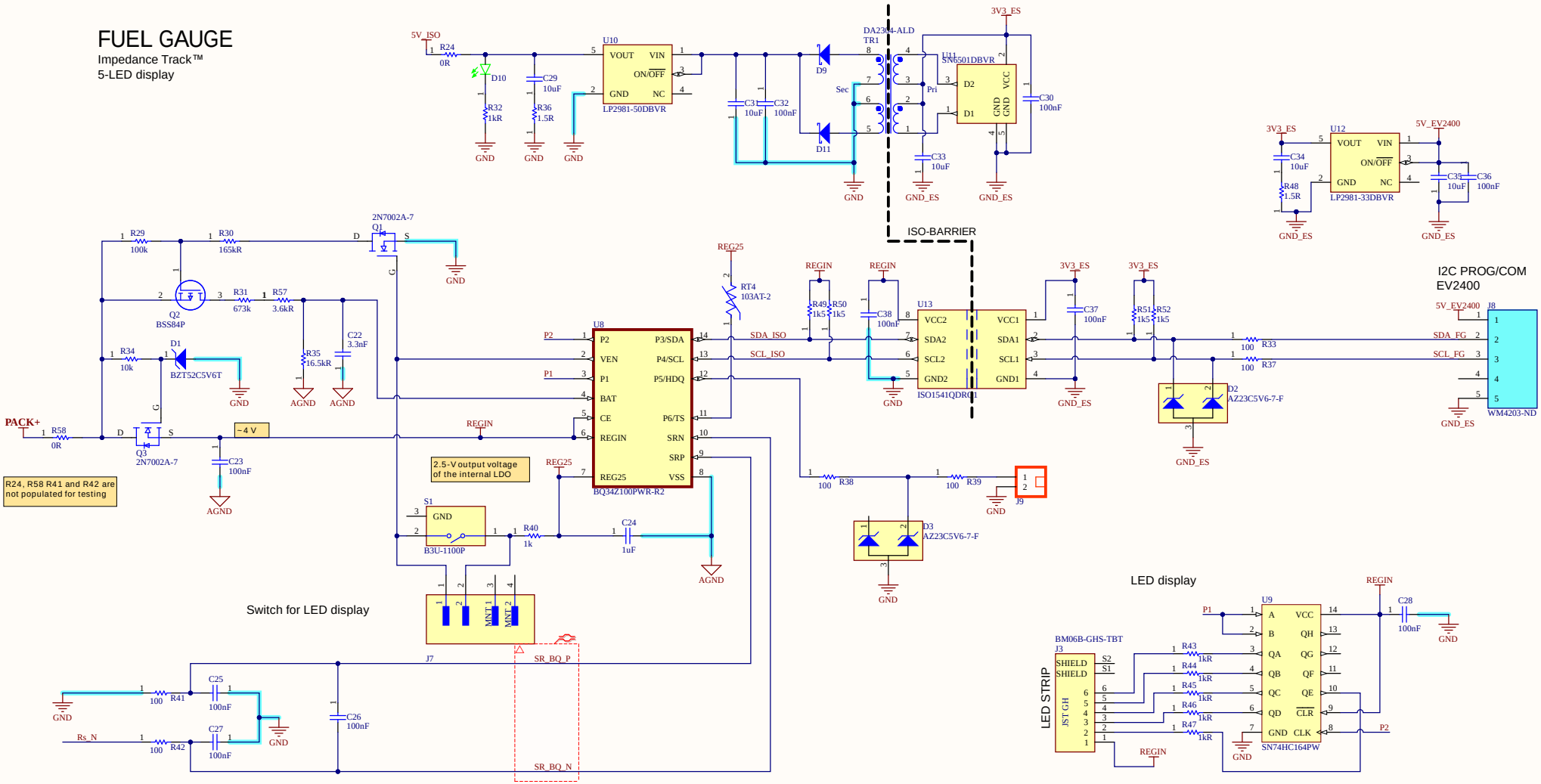

Mouting holes

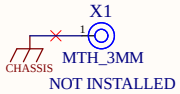

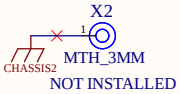

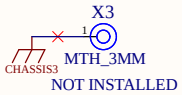

Fiducials