BATTERY CHARGER IC

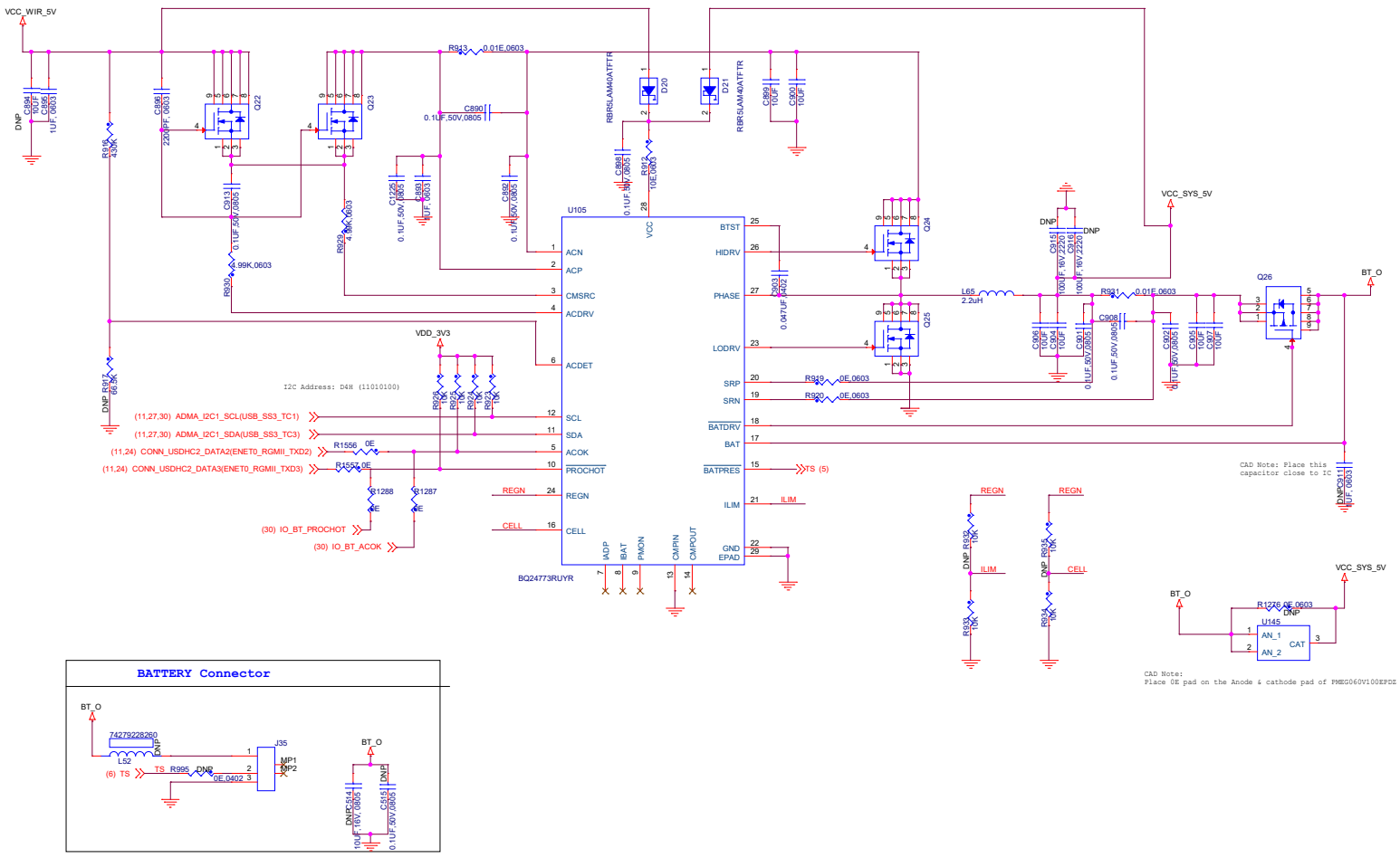

BATTERY Connector