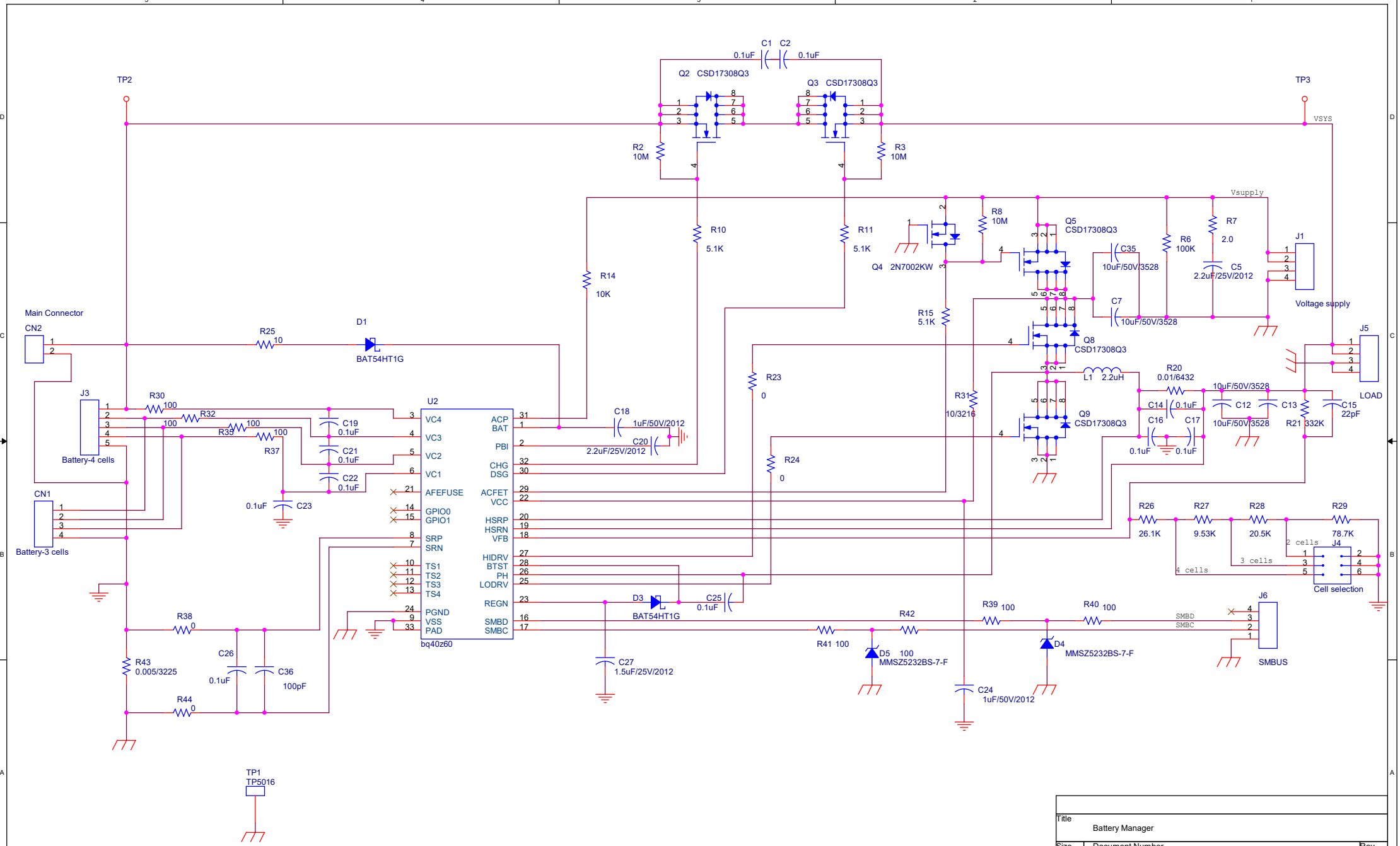

Title	Battery Manager	
Size B	Document Number Battery Manager Board	Rev 1.0
Date: Wednesday, October 10, 2018	Sheet 1 of 3	