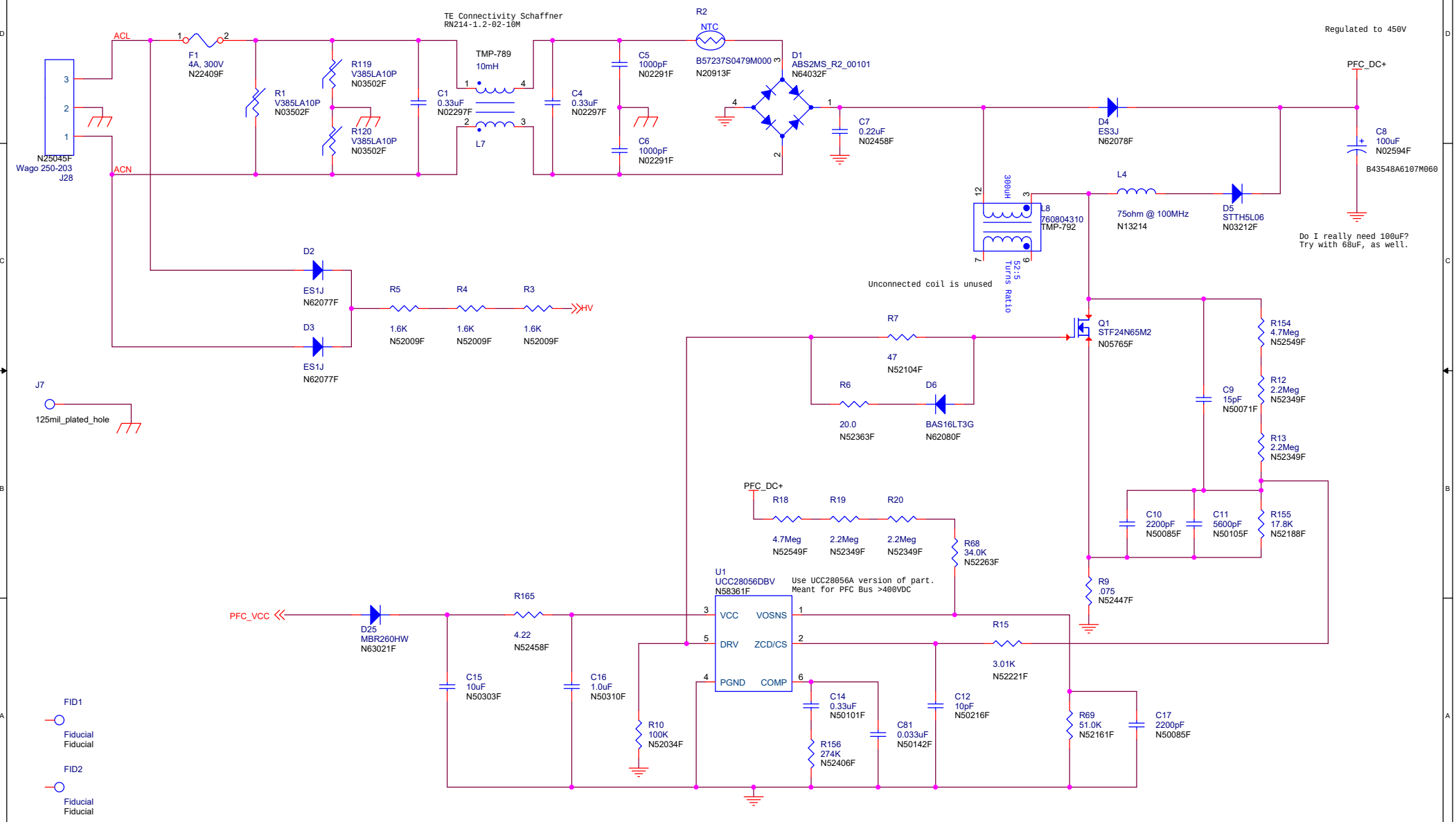4 Channel RGBW DMX 100W Driver