RJ45 CONN
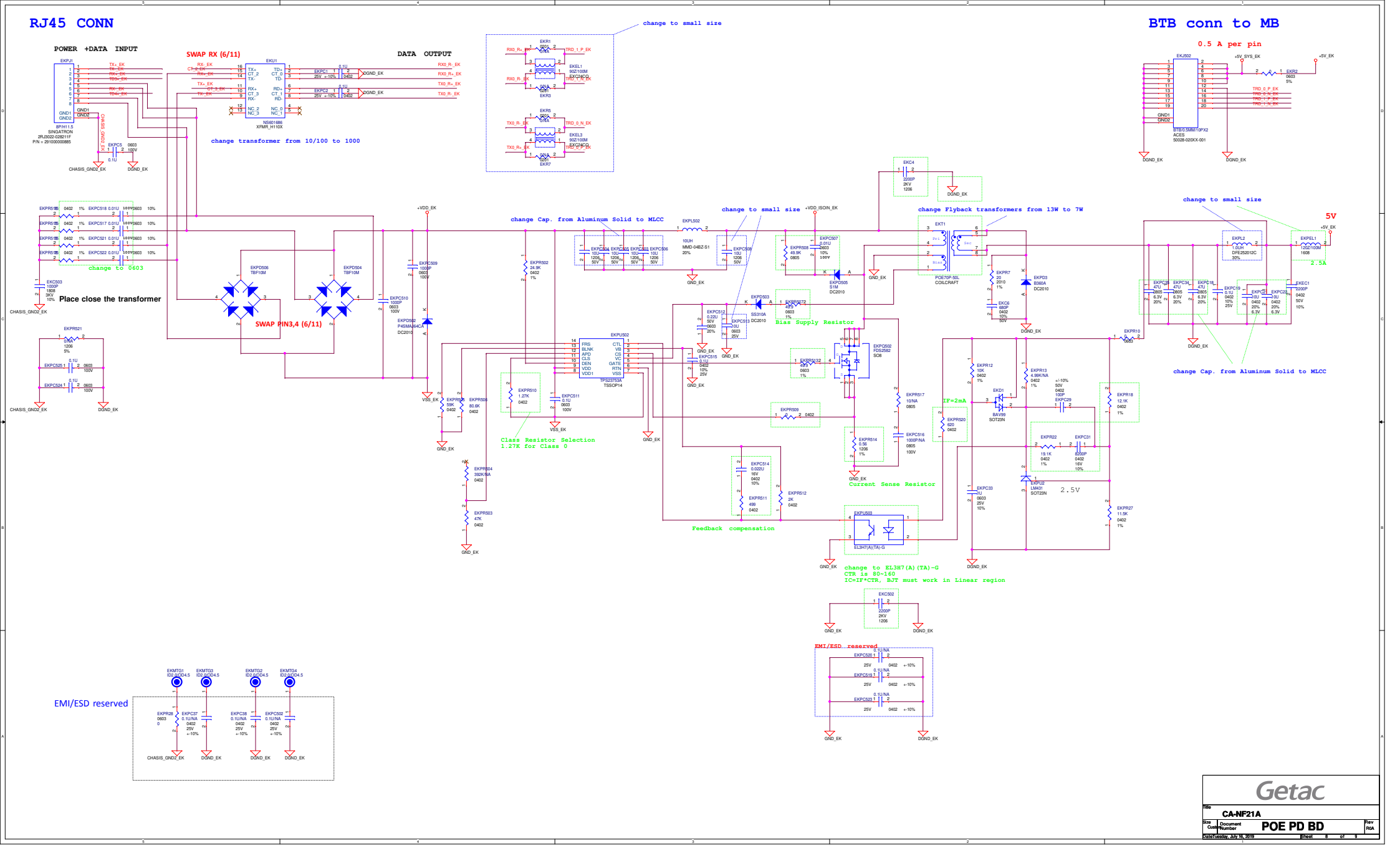
BTB conn to MB