* TPS25831-Q1 Configuration (Application: Apple CarPlay, MFi)

Switching Freq = 400 kHz
3A Type-C load current
Buck avergae current limit
w/ cable compensation
CDP mode

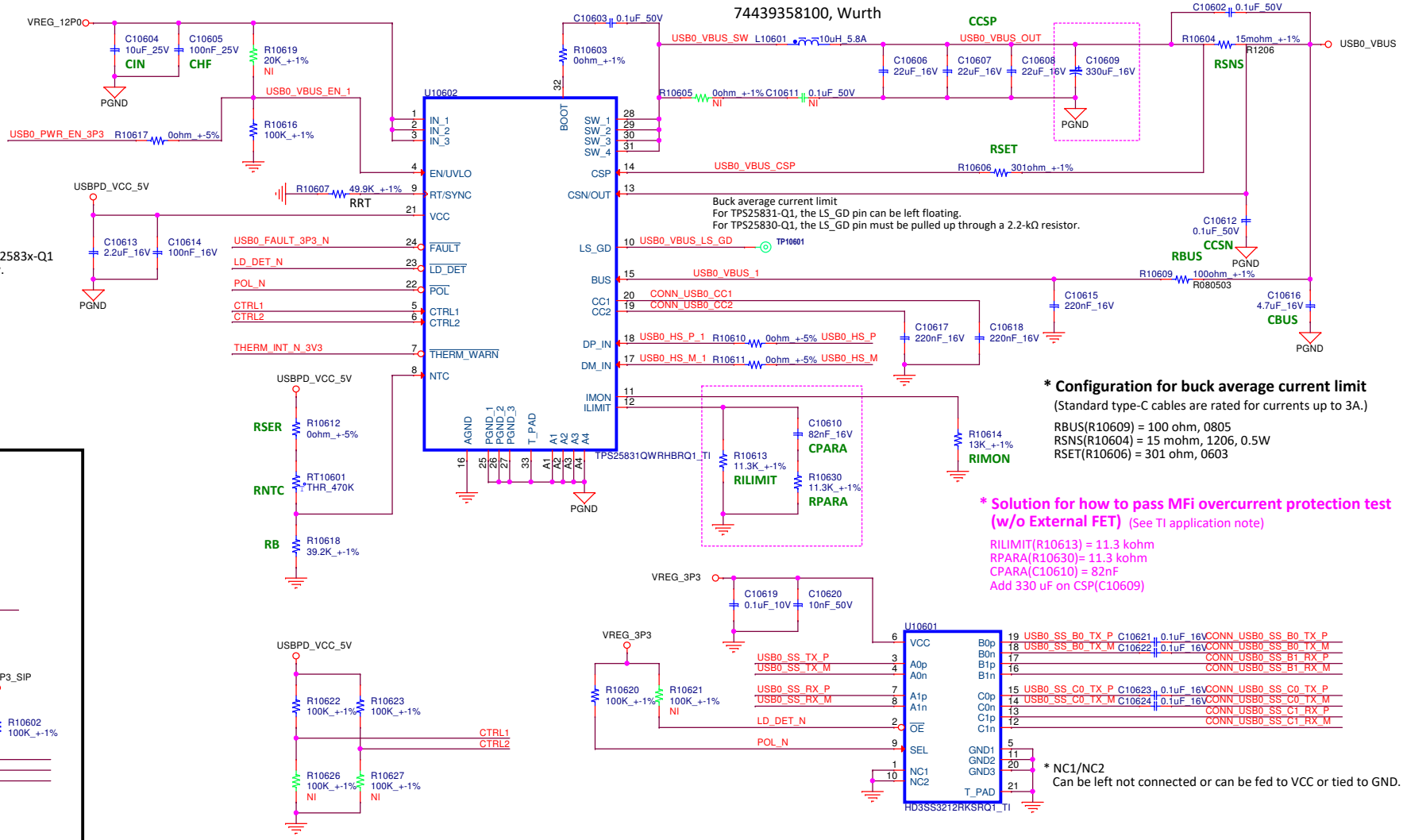

* The recommended switching frequency of the TPS2583x-Q1 is in the range of 300 to 400 kHz for best efficiency.
RRT= 49.9 Kohm for 400 KHz

* Configuration for buck average current limit

(Standard type-C cables are rated for currents up to 3A.)

RBUS(R10609) = 100 ohm, 0805
RSNS(R10604) = 15 mohm, 1206, 0.5W
RSET(R10606) = 301 ohm, 0603

* Solution for how to pass MFi overcurrent protection test (w/o External FET) (See TI application note)

RILIMIT(R10613) = 11.3 kohm
RPARA(R10630)= 11.3 kohm
CPARA(C10610) = 82nF
Add 330 uF on CSP(C10609)

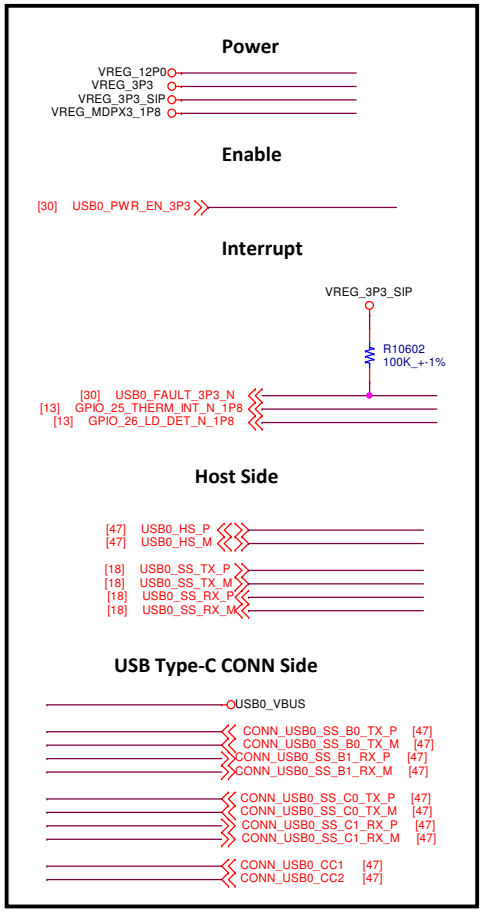

* NC1/NC2
Can be left not connected or can be fed to VCC or tied to GND.

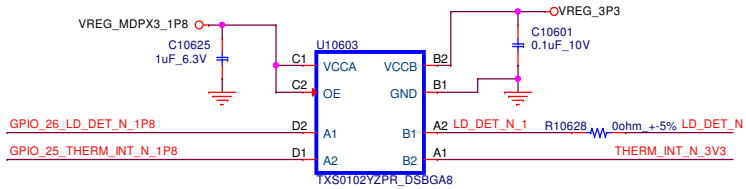

* LD_DET_N/FAULT_N
TI TXS102 has built-in 10-kΩpull-up resistors on each pin

DEVICE	CTR L1	CTR L2	CURRENT LIMIT SETTING	USB MODES
TPS25831 -Q1	0	1	*Current Limit Setting using R_{ILIMIT}*	Type-C (3 A) + DCP Auto Mode
	1	0		Type-C (1.5 A) + SDP Mode
	1	1		Type-C (3 A) + CDP Mode

Table 11-2. L and C_{OUT} Typical Values

f_{SW}	V_{OUT} WITHOUT CABLE COMPENSATION	$C_{IN} + C_{HF}$	L	CURRENT LIMIT	C_{CSP}	$C_{CSN/OUT}$	C_{BUS}
400 kHz	5.10 V	1 × 10 µF + 1 × 100 nF	10 µH	Buck Avg	5 × 22 µF	100 nF	1 to 4.7 µF