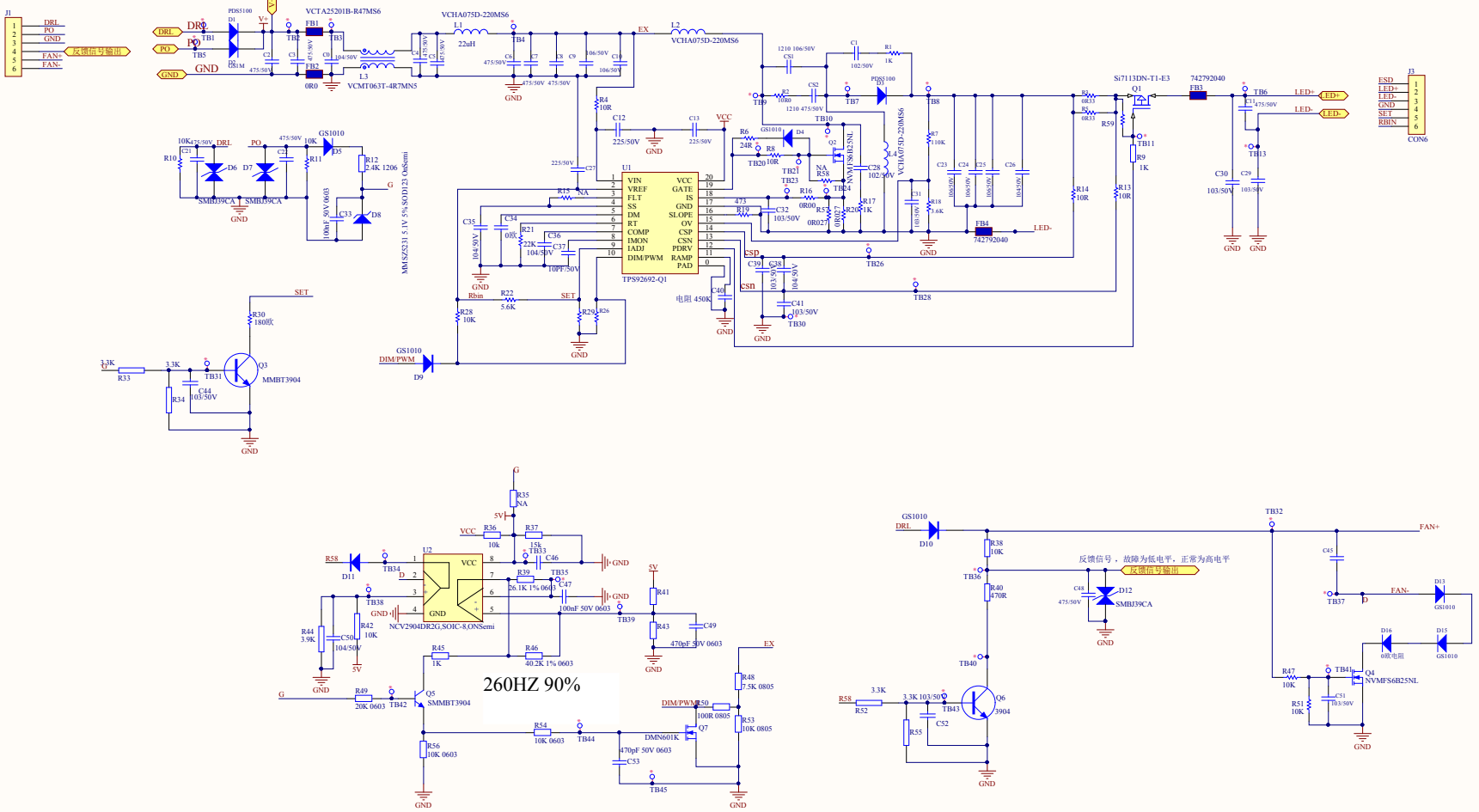

Title		
Size A2	Number	Revision
Date: 2018/4/17	Sheet of	
File: F:\F盘\CE16 DRL&PO LED SCH 20180409.SCHDOC		